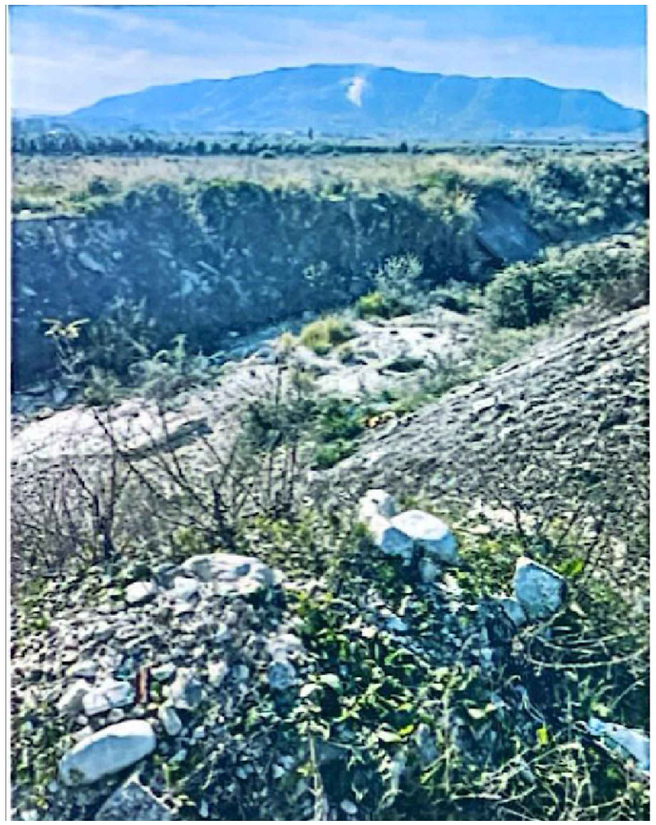

Projekt - Zbatimi

"Mrojtje lumore Vrisi,Bajkaj,Delvine"

POROSITI

BASHKIA DELVINE

PROJEKTUES

ING.KRISTAQ KALI

HARTOGRAFIA SH .1:1000

REPUBLIKA E SHQIPERISË

QARKU VLORË

BASHKIA DELVINE

DREJTORIA E URBANISTIKES

OBJEKTI: MBROJTJE LUMORE "VRISI",BAJKAJ,DELVINE

PROJEKTOI: ING.KRISTAQ KALI
LIÇ.: H/T.0103/5

AZHORNIMI TOPOGRAFIK SH: 1:1000

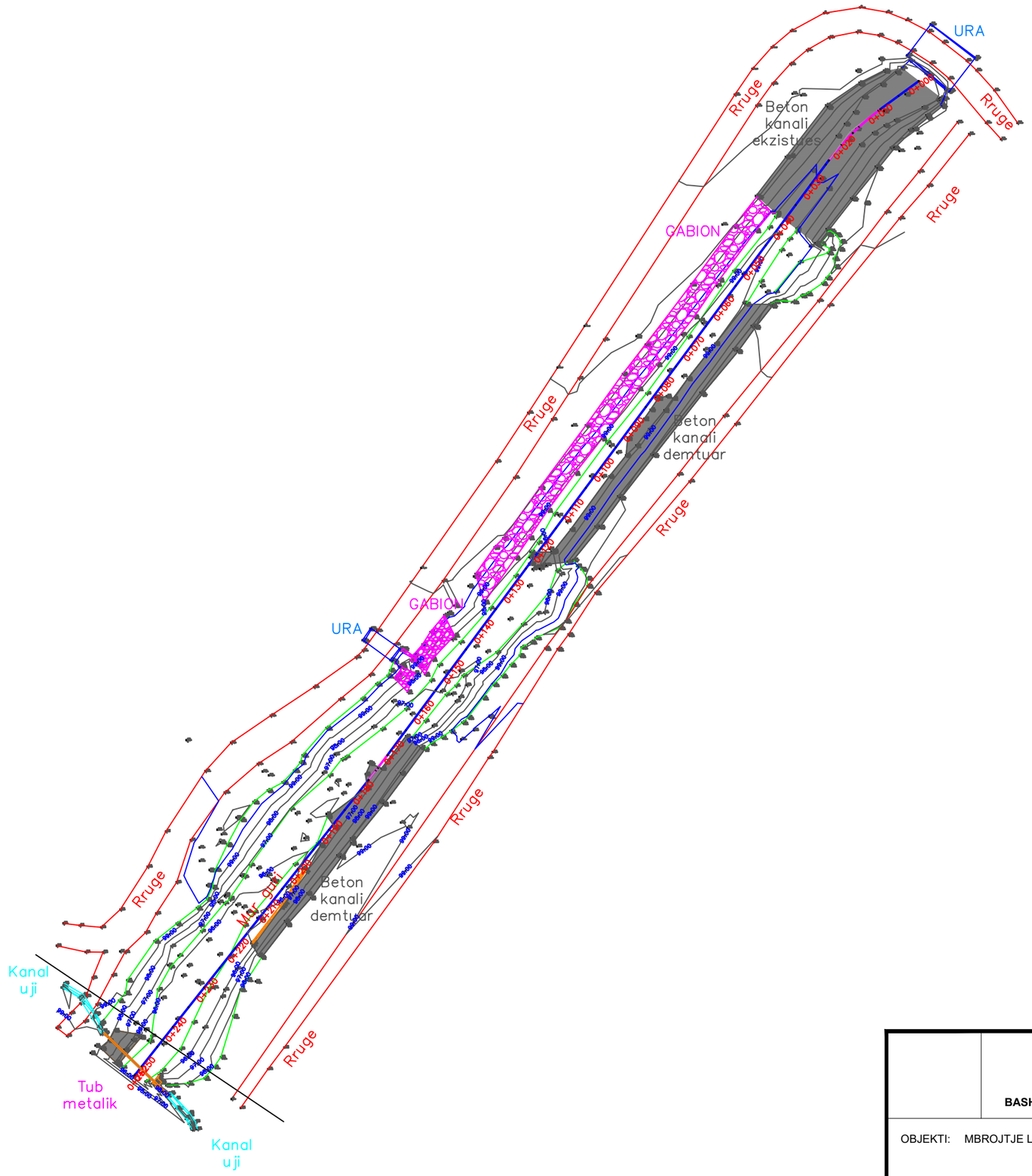

BASHKIA DELVINE

OBJEKTI: MBROJTJE LUMORE "VRISI",BAJKAJ,DELVINE

PROJEKTOI: iNG.KRISTAQ KALI
LIÇ.: H/T.0103/5

PLANIMETRIA SH: 1:500

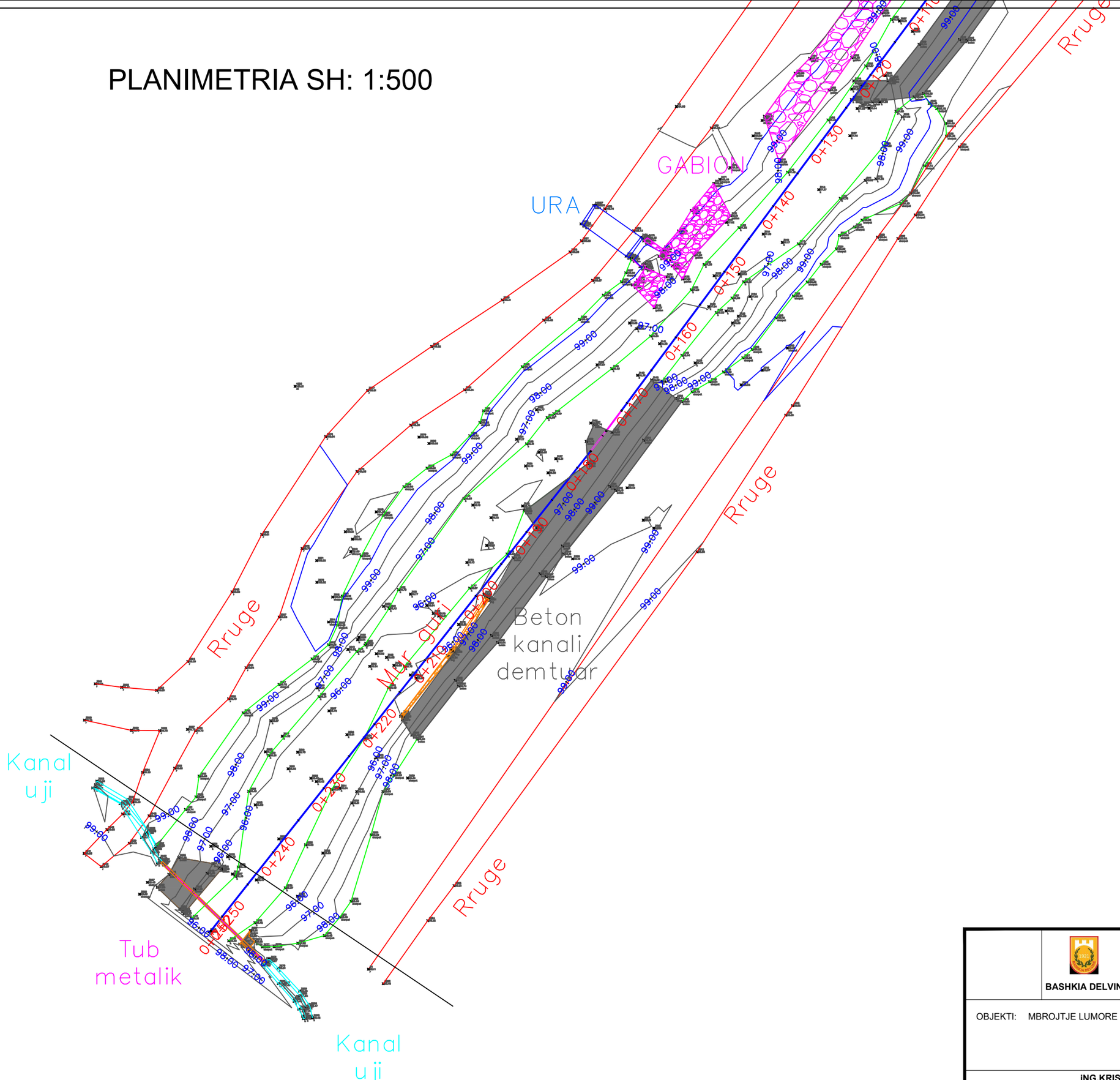

	BASHKIA DELVINE	DREJTORIA E URBANISTIKES
OBJEKTI: MBROJTJE LUMORE "VRISI",BAJKAJ,DELVINE		
PROJEKTOI:	iNG.KRISTAQ KALI LIÇ.: H/T.0103/5	

PLANIMETRIA SH: 1:500

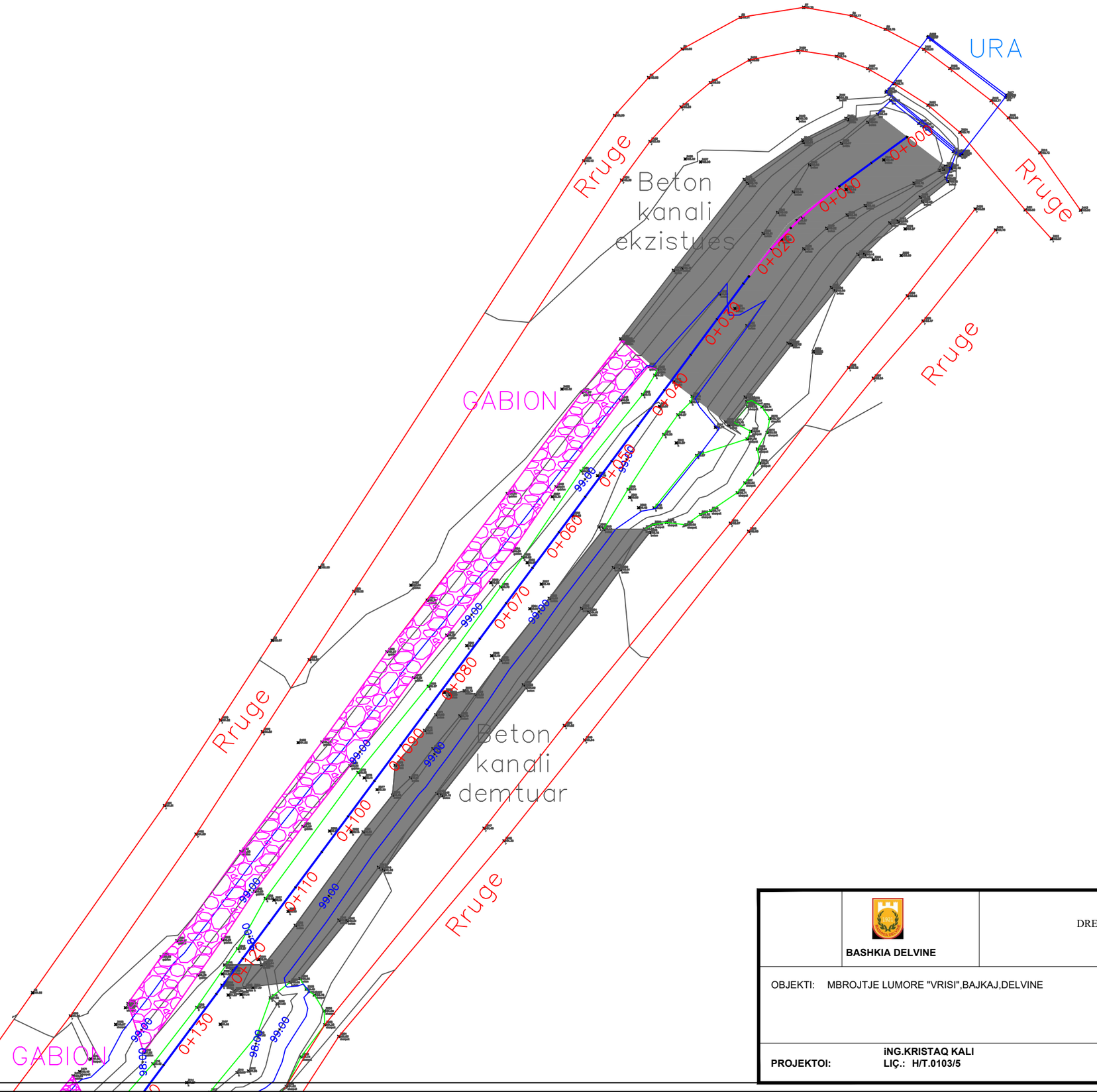

	BASHKIA DELVINE	DREJTORIA E URBANISTIKES
OBJEKTI:	MBROJTJE LUMORE "VRISI",BAJKAJ,DELVINE	
PROJEKTOI:	iNG.KRISTAQ KALI LIÇ.: H/T.0103/5	

PLANIMETRIA SH: 1:1000

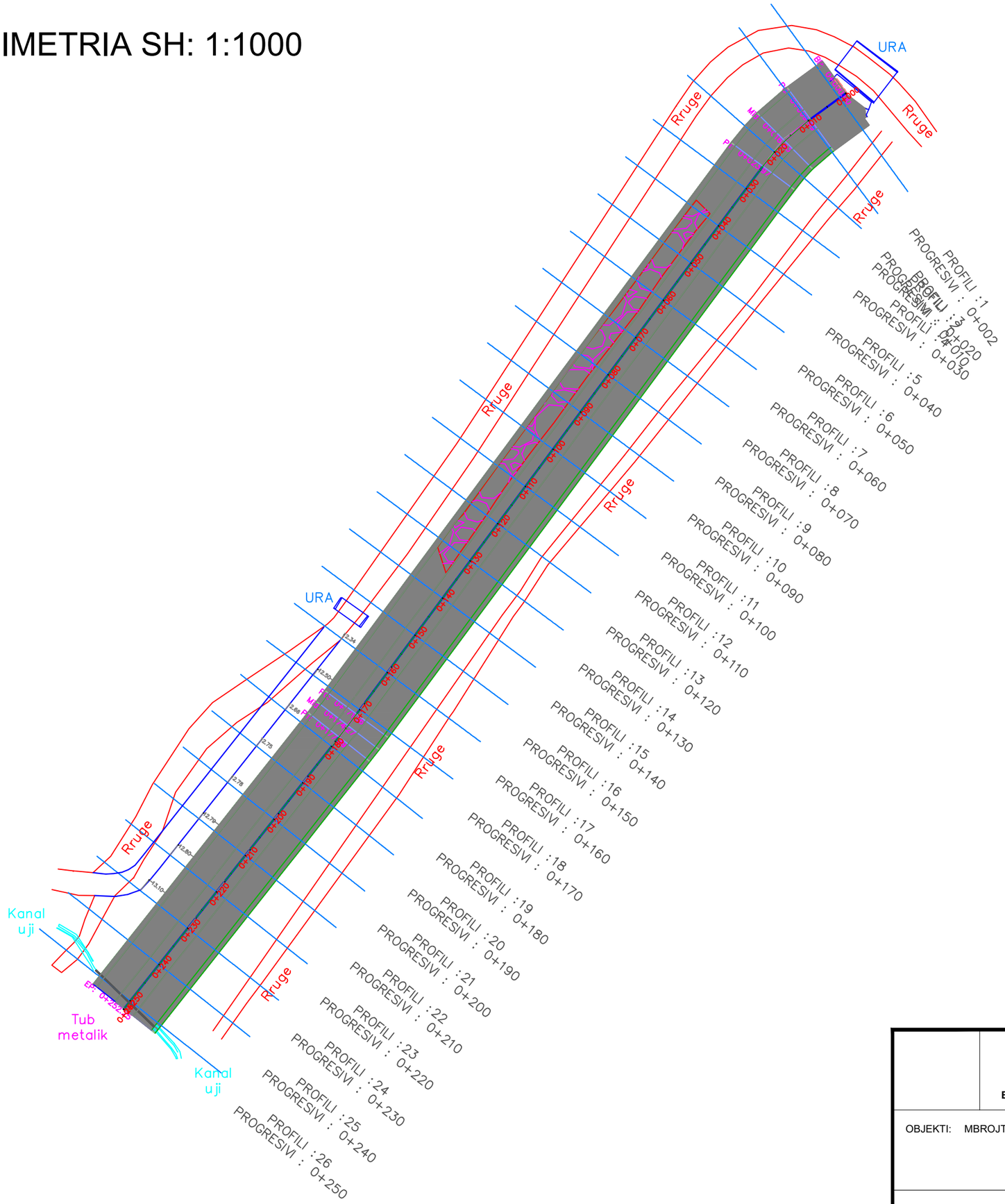

BASHKIA DELVINE

OBJEKTI: MBROJTJE LUMORE "VRISI",BAJKAJ,DELVINE

PROJEKTOI: **iNG.KRISTAQ KALI**
LIÇ.: H/T.0103/5

PLANIMETRIA SH: 1:500

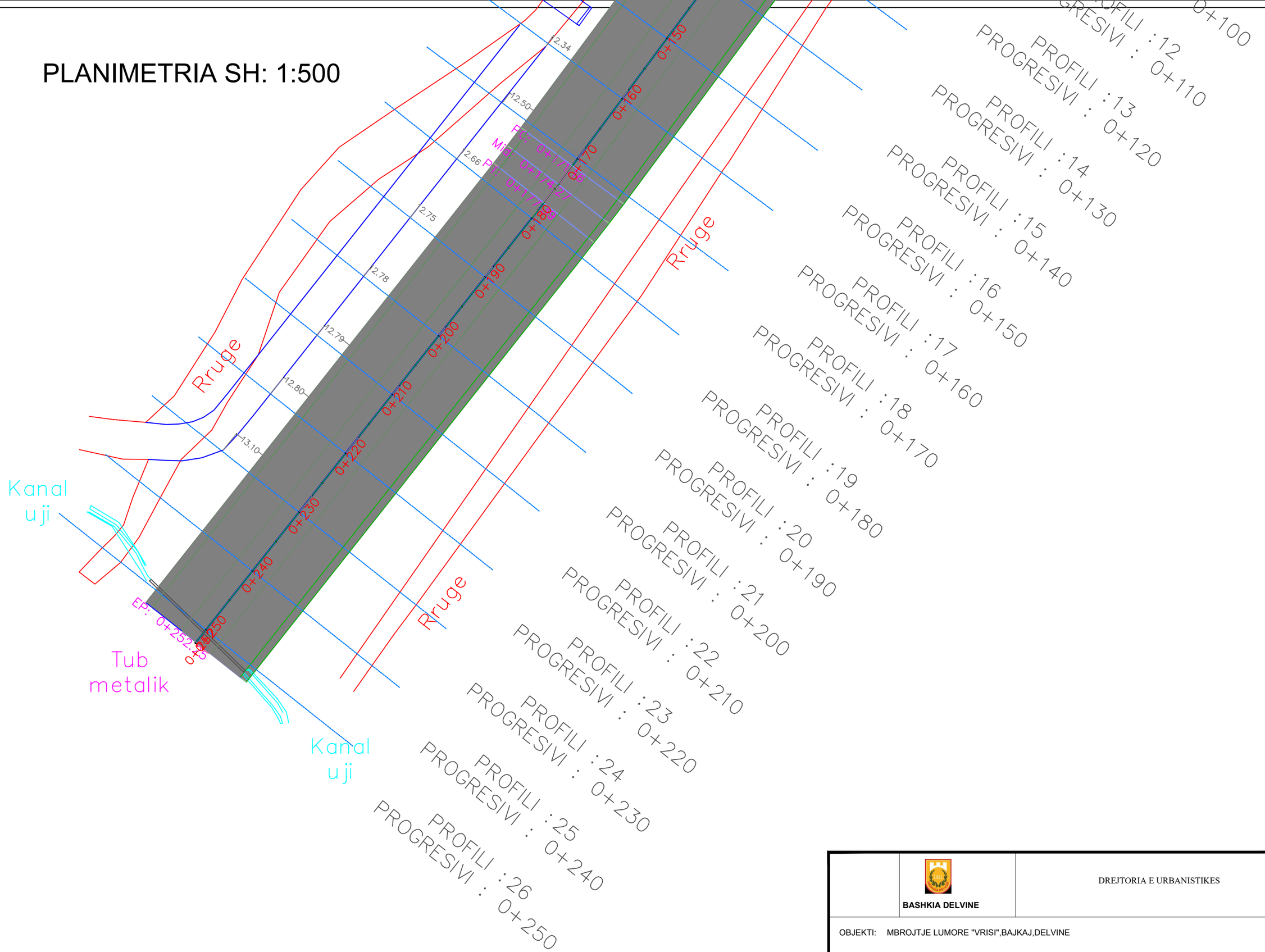

	BASHKIA DELVINE	DREJTORIA E URBANISTIKES
OBJEKTI:	MBROJTJE LUMORE "VRISI",BAJKAJ,DELVINE	
PROJEKTOI:	iNG.KRISTAQ KALI LIÇ.: H/T.0103/5	

PLANIMETRIA SH: 1:500

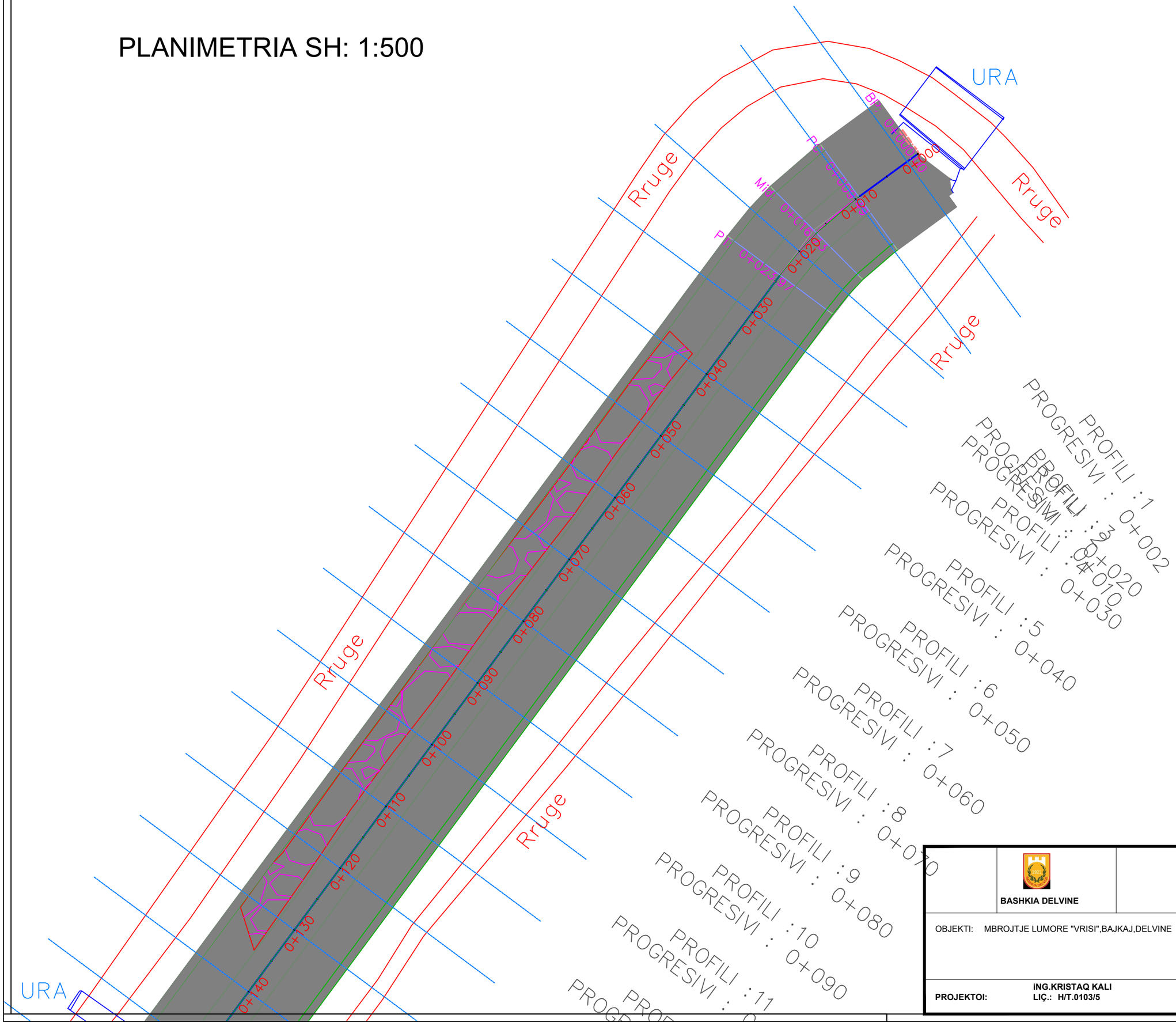

	BASHKIA DELVINE	DREJTORIA E URBANISTIKES
OBJEKTI:	MBROJTJE LUMORE "VRISI",BAJKAJ,DELVINE	
PROJEKTOI:	iNG.KRISTAQ KALI LIÇ.: H/T.0103/5	

PLANIMETRIA E PRITES SH: 1:500

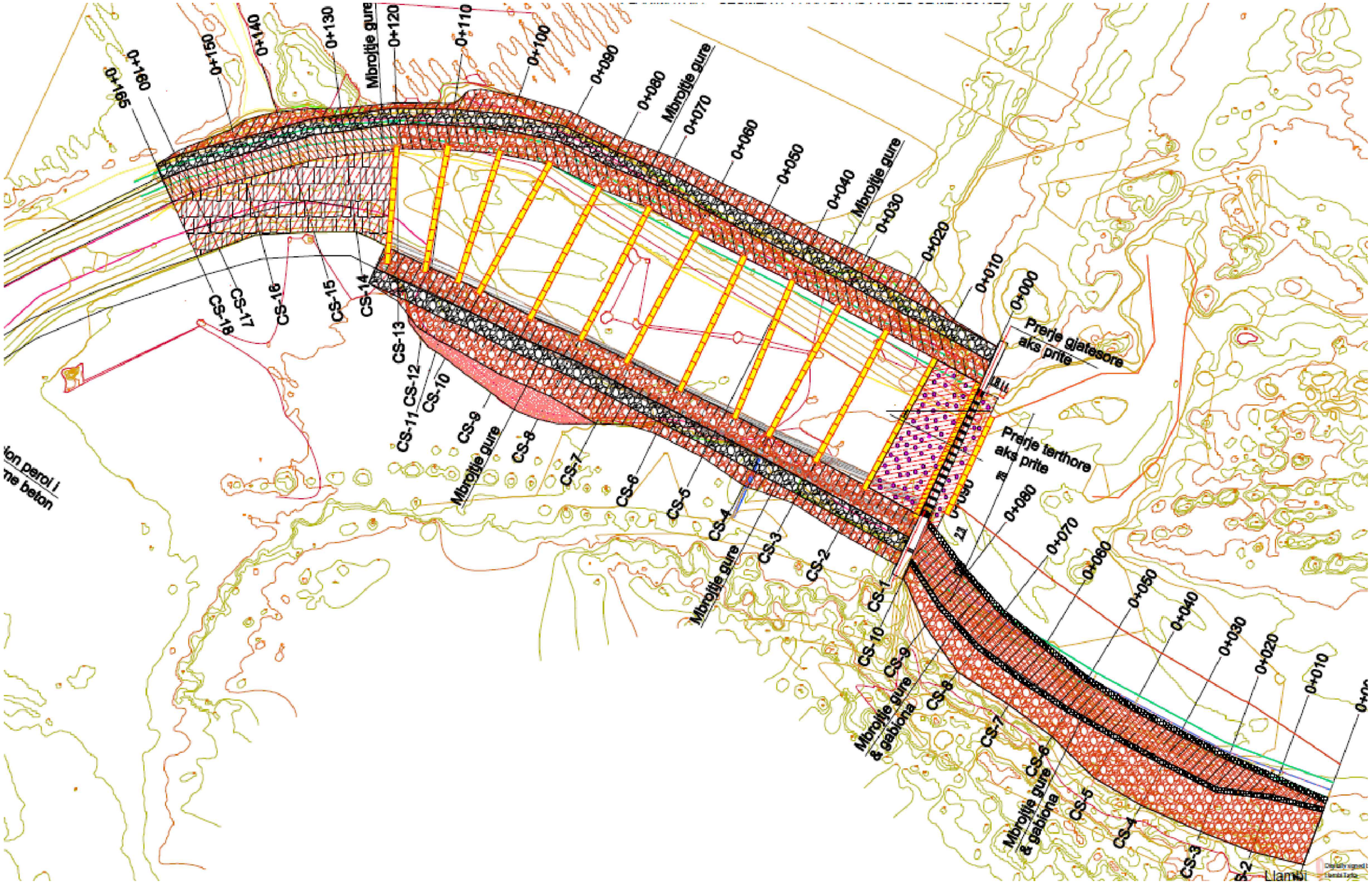

	BASHKIA DELVINE	DREJTORIA E URBANISTIKES

OBJEKTI: MBROJTJE LUMORE "VRISI",BAJKAJ,DELVINE

PROJEKTOI: iNG.KRISTAQ KALI
LIÇ.: H/T.0103/5

PROFILI GJATESOR

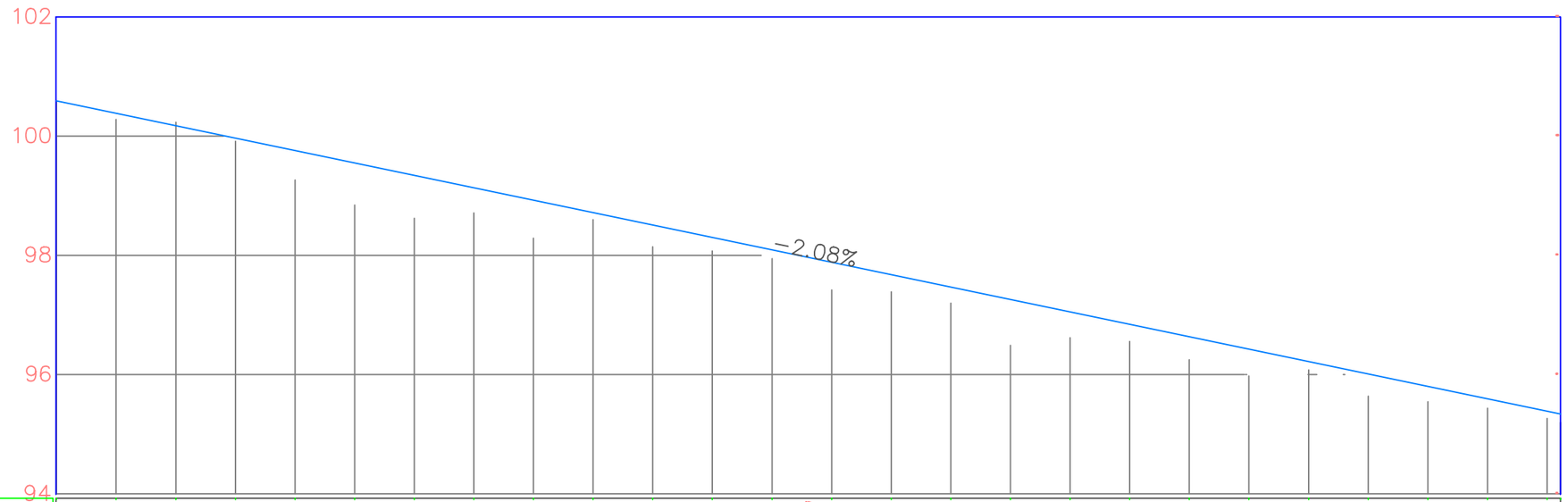

PROFILAT	PROGRESIVI	GERMIM MBUSHJE	KUOTA E PROJEKTIT	KUOTA E TERENIT
PT: 1	0+000	0.000	100.389	100.59
8.30				
PT: 2	0+010	0.100	100.381	100.28
10.00				
PT: 3	0+020	-0.060	100.173	100.23
10.00				
PT: 4	0+030	0.051	99.964	99.91
10.00				
PT: 5	0+040	0.491	99.756	99.26
10.00				
PT: 6	0+050	0.706	99.548	98.84
10.00				
PT: 7	0+060	0.718	99.340	98.62
10.00				
PT: 8	0+070	0.422	99.132	98.71
10.00				
PT: 9	0+080	0.637	98.924	98.29
10.00				
PT: 10	0+090	0.117	98.715	98.60
10.00				
PT: 11	0+100	0.365	98.507	98.14
10.00				
PT: 12	0+110	0.227	98.299	98.07
10.00				
PT: 13	0+120	0.147	98.091	97.94
10.00				
PT: 14	0+130	0.463	97.883	97.42
10.00				
PT: 15	0+140	0.287	97.675	97.39
10.00				
PT: 16	0+150	0.268	97.466	97.20
10.00				
PT: 17	0+160	0.767	97.258	96.49
10.00				
PT: 18	0+170	0.429	97.050	96.62
10.00				
PT: 19	0+180	0.284	96.842	96.56
10.00				
PT: 20	0+190	0.383	96.634	96.25
10.00				
PT: 21	0+200	0.448	96.426	95.98
10.00				
PT: 22	0+210	0.139	96.217	96.08
10.00				
PT: 23	0+220	0.369	96.009	95.64
10.00				
PT: 24	0+230	0.255	95.801	95.55
10.00				
PT: 25	0+240	0.158	95.593	95.43
10.00				
PT: 26	0+250	0.120	95.385	95.26
	0+252	0.139	95.338	95.20

	REPUBLIKA E SHQIPERISË **QARKU VLORË** **BASHKIA DELVINE**	DREJTORIA E URBANISTIKES

OBJEKTI: MBROJTJE LUMORE "VRISI",BAJKAJ,DELVINE

PROJEKTOI: **iNG.KRISTAQ KALI**
LIÇ.: H/T.0103/5

PROGRESIVI: 0+002
PROFILI : 1

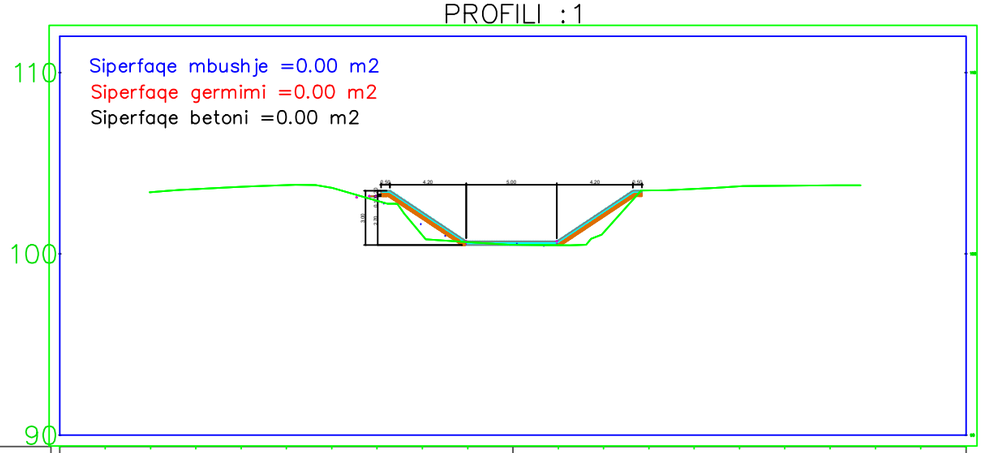

KUOTA E TERENIT	103.398	103.571	103.697	103.798	103.643	102.931	101.035	100.651	100.503	100.482	101.179	103.503	103.589	103.733	103.763	103.782				
GERMIM MBUSHJE								0.122	0.769	-0.098	0.051	0.071	0.624	-0.450						
KUOTA E PROJEKTIT								103.053	101.803	100.553	100.553	100.553	101.803	103.053						
DISTANCAT	-25	-22	-20	-18	-15	-12	-10	-8	-5	-2	0	2	5	8	10	12	15	18	20	22	25

PROGRESIVI: 0+010
PROFILI : 2

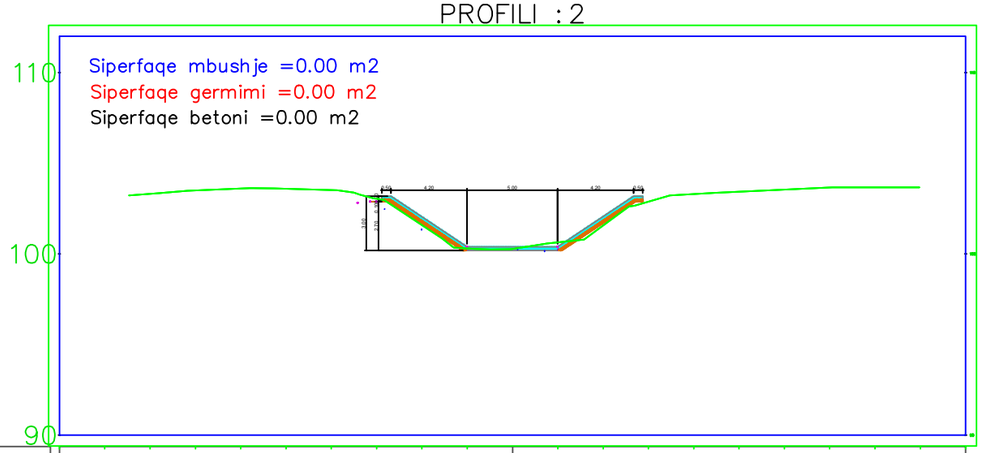

KUOTA E TERENIT	103.314	103.499	103.603	103.588	103.518	103.040	101.585	100.299	100.282	100.635	101.571	102.881	103.300	103.433	103.547	103.661	103.668			
GERMIM MBUSHJE							-0.160	0.046	0.081	0.099	-0.254	0.059	0.000							
KUOTA E PROJEKTIT							102.881	101.631	100.381	100.381	100.381	101.630	102.880							
DISTANCAT	-25	-22	-20	-18	-15	-12	-10	-8	-5	-2	0	2	5	8	10	12	15	18	20	22	25

Ing.Kristaq Kali	Mbrojtje lumore "Vrisi",Bajkaj,Delvine	Faza Proj-Zbat
	Profilat Tërthorë	SH 1:100

PROGRESIVI: 0+020
PROFILI : 3

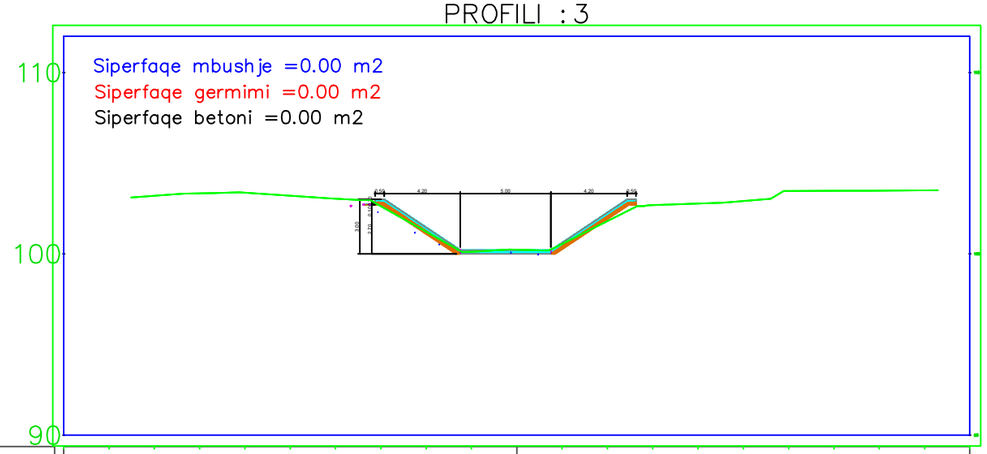

KUOTA E TERENIT	103.200	103.339	103.380	103.211	103.045	102.622	101.217	100.119	100.233	100.551	101.808	102.686	102.774	102.913	103.469	103.477	103.489	103.500		
GERMIM MBUSHJE						0.050	0.206	0.054	-0.060	-0.378	-0.386	-0.014								
KUOTA E PROJEKTIT						102.672	101.422	100.172	100.172	100.172	101.422	102.672								
DISTANCAT	-25	-22	-20	-18	-15	-12	-10	-8	-5	-2	0	2	5	8	10	12	15	18	20	22	25

PROGRESIVI: 0+030
PROFILI : 4

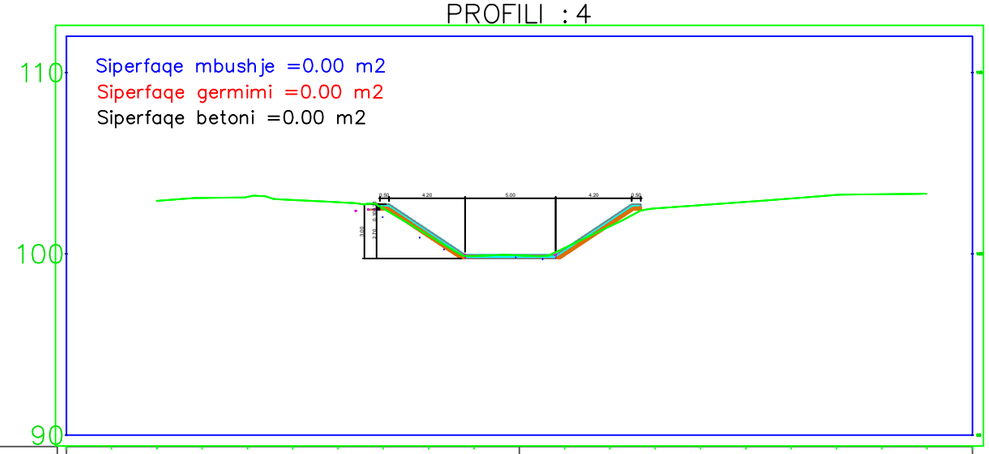

KUOTA E TERENIT	102.923	103.083	103.148	102.974	102.848	102.493	101.010	99.885	99.913	100.325	101.514	102.501	102.684	102.866	103.050	103.251	103.291			
GERMIM MBUSHJE						-0.029	0.204	0.080	0.051	-0.361	-0.300	-0.037								
KUOTA E PROJEKTIT						102.464	101.214	99.964	99.964	99.964	101.214	102.464								
DISTANCAT	-25	-22	-20	-18	-15	-12	-10	-8	-5	-2	0	2	5	8	10	12	15	18	20	22	25

Ing.Kristaq Kali	Mbrojtje lumore "Vrisi",Bajkaj,Delvine	Faza Proj-Zbat
	Profilat Tërthorë	SH 1:100

PROGRESIVI: 0+040
PROFILI : 5

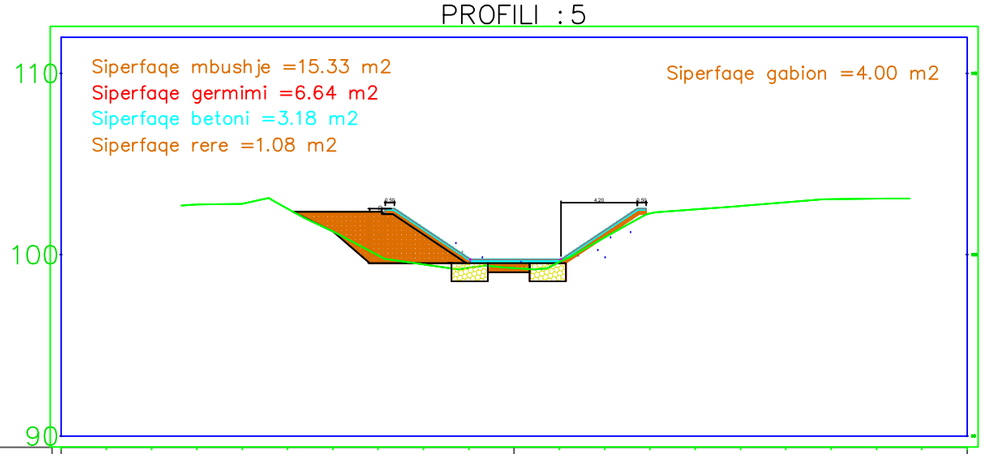

DISTANCAT	KUOTA E TERENIT	GERMIM MBUSHJE	KUOTA E PROJEKTIT
-25			
-22			
-20			
-18			
-15			
-12			
-10			
-8	102.770		
-5	102.816		
-2	102.538		
0	101.291	2.295	102.256
2	99.961	1.540	101.006
5	99.466	0.481	99.756
8	99.275	0.491	99.756
10	99.265	0.158	99.756
12	99.598	0.050	101.006
15	100.956	-0.015	102.256
18	102.271		
20	102.495		
22	102.684		
25	102.891		
	103.066		
	103.096		

PROGRESIVI: 0+050
PROFILI : 6

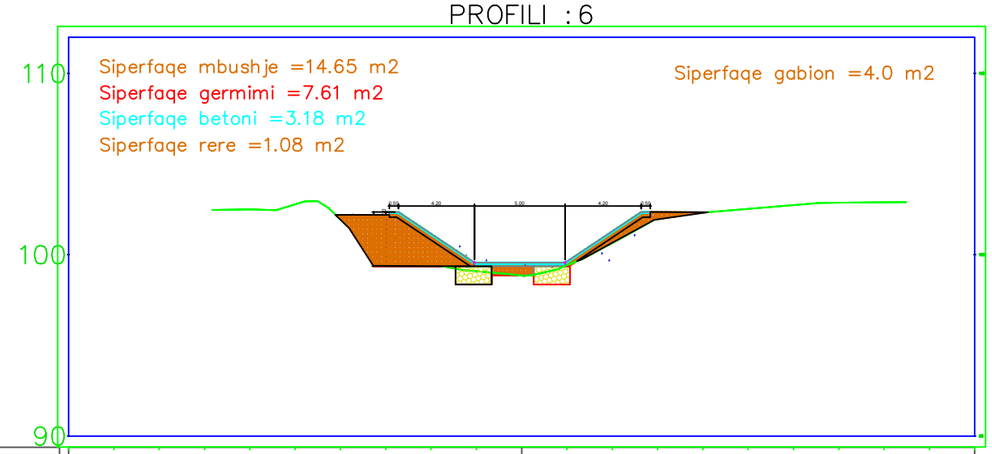

DISTANCAT	KUOTA E TERENIT	GERMIM MBUSHJE	KUOTA E PROJEKTIT
-25			
-22			
-20			
-18			
-15			
-12			
-10			
-8	102.496		
-5	102.777		
-2	101.934	1.897	102.048
0	100.151	1.301	100.798
2	99.497	0.461	99.548
5	99.087	0.706	99.548
8	98.842	0.121	99.548
10	99.427	0.156	100.798
12	100.642	0.088	102.048
15	101.960		
18	102.325		
20	102.532		
22	102.739		
25	102.870		
	102.892		

Ing.Kristaq Kali	Mbrojtje lumore "Vrisi",Bajkaj,Delvine	Faza Proj-Zbat
	Profilat Tërthorë	SH 1:100

PROGRESIVI: 0+060

PROGRESIVI: 0+060
PROFILI : 7

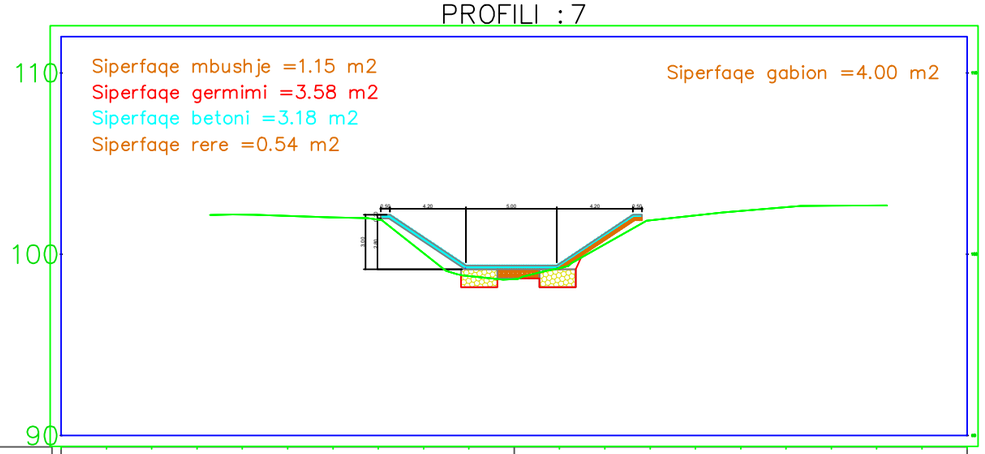

KUOTA E TERENIT													102.180	102.115	102.033	101.903	100.059	98.789	98.621	99.226	100.545	101.860	102.132	102.379	102.586	102.675	102.684
GERMIM MBUSHJE																−0.063	0.531	0.551	0.718	0.113	0.044	−0.020					
KUOTA E PROJEKTIT																101.840	100.590	99.340	99.340	99.340	100.590	101.840					
DISTANCAT	−25	−22	−20	−18	−15	−12	−10	−8	−5	−2	0	2	5	8	10	12	15	18	20	22	25						

PROGRESIVI: 0+070
PROFILI : 8

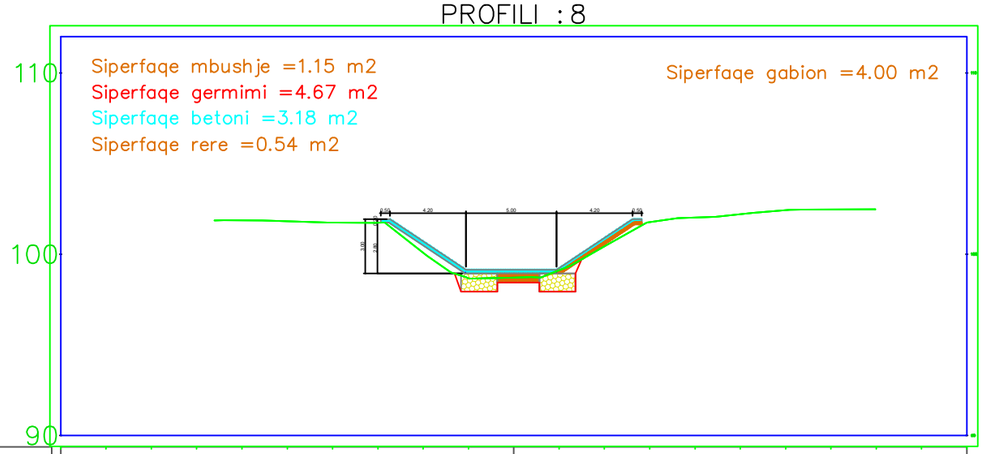

KUOTA E TERENIT													101.863	101.814	101.738	101.737	100.080	98.673	98.710	99.115	100.424	101.764	102.020	102.210	102.434	102.467
GERMIM MBUSHJE																−0.105	0.302	0.459	0.421	0.017	−0.042	−0.133				
KUOTA E PROJEKTIT																101.632	100.382	99.132	99.132	99.132	100.381	101.631				
DISTANCAT	−25	−22	−20	−18	−15	−12	−10	−8	−5	−2	0	2	5	8	10	12	15	18	20	22	25					

Ing.Kristaq Kali	Mbrojtje lumore "Vrisi",Bajkaj,Delvine	Faza Proj-Zbat
	Profilat Tërthorë	SH 1:100

PROGRESIVI: 0+080
PROFILI : 9

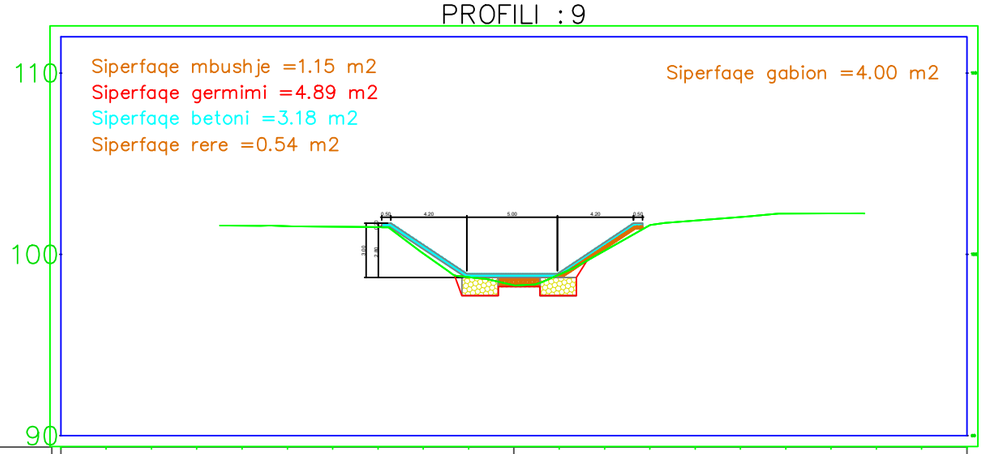

KUOTA E TERENIT							101.577	101.548	101.524	101.507	100.044	98.737	98.286	98.887	100.192	101.604	101.860	102.061	102.250	102.259
GERMIM MBUSHJE							-0.083	0.129	0.186	0.637	0.036	-0.019	-0.181							
KUOTA E PROJEKTIT							101.423	100.173	98.923	98.923	98.923	100.173	101.423							
DISTANCAT	-25	-22	-20	-18	-15	-12	-10	-8	-5	-2	0	2	5	8	10	12	15	18	20	22	25

PROGRESIVI: 0+090
PROFILI : 10

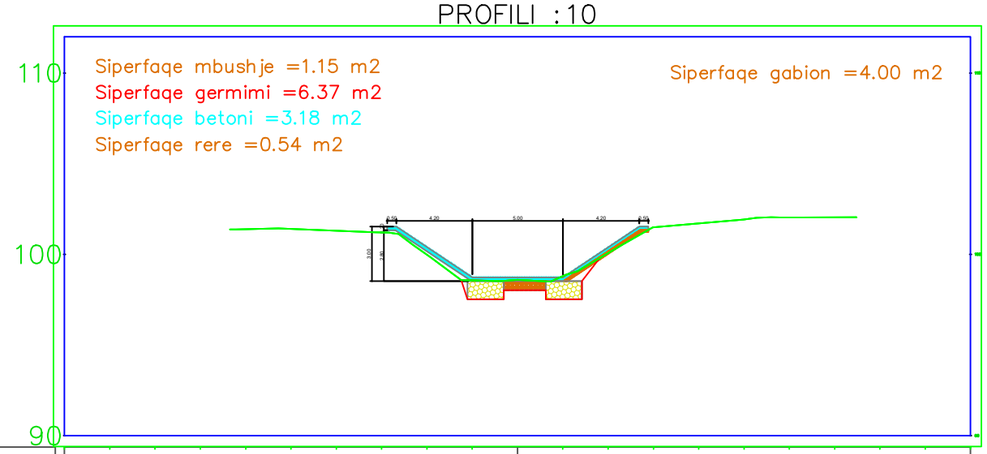

KUOTA E TERENIT							101.381	101.402	101.298	101.207	99.975	98.566	98.598	98.794	100.069	101.486	101.701	101.918	102.035	102.039
GERMIM MBUSHJE							0.008	-0.010	0.149	0.117	-0.079	-0.104	-0.271							
KUOTA E PROJEKTIT							101.215	99.965	98.715	98.715	98.715	99.965	101.215							
DISTANCAT	-25	-22	-20	-18	-15	-12	-10	-8	-5	-2	0	2	5	8	10	12	15	18	20	22	25

Ing.Kristaq Kali	Mbrojtje lumore "Vrisi",Bajkaj,Delvine	Faza Proj-Zbat
	Profilat Tërthorë	SH 1:100

PROGRESIVI: 0+100
PROFILI : 11

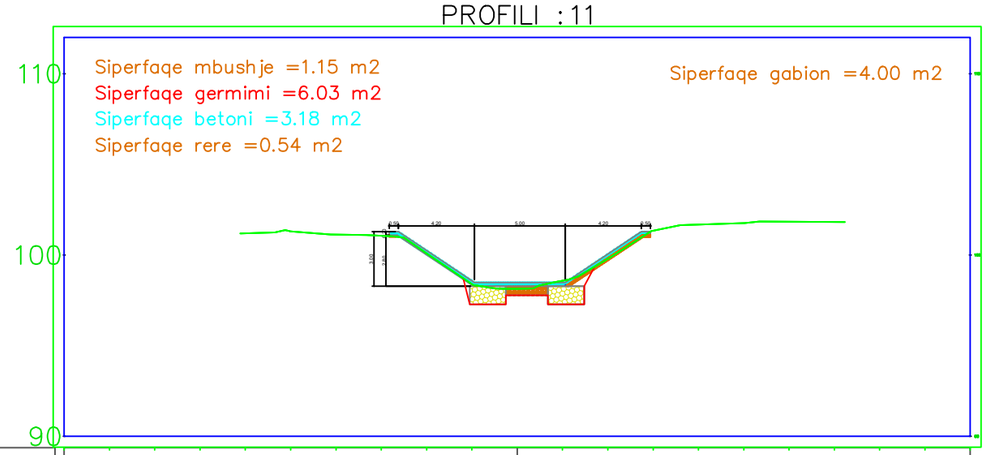

KUOTA E TERENIT												101.195	101.309	101.124	101.062	100.096	98.391	98.143	98.582	99.791	101.338	101.676	101.765	101.839	101.820
GERMIM MBUSHJE															−0.055	−0.339	0.116	0.364	−0.075	−0.034	−0.331				
KUOTA E PROJEKTIT															101.007	99.757	98.507	98.507	98.507	99.757	101.007				
DISTANCAT	−25	−22	−20	−18	−15	−12	−10	−8	−5	−2	0	2	5	8	10	12	15	18	20	22	25				

PROGRESIVI: 0+110
PROFILI : 12

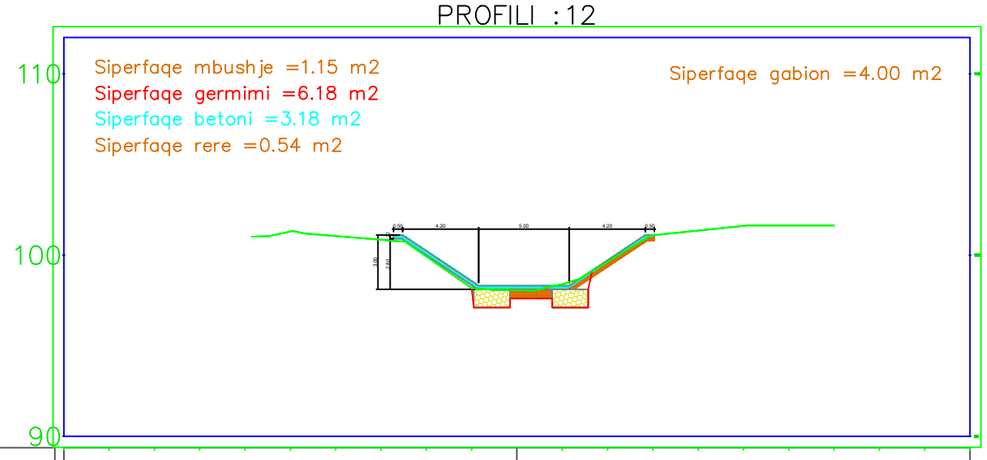

KUOTA E TERENIT												101.309	101.055	100.851	99.930	98.189	98.072	98.395	99.635	101.106	101.355	101.610	101.633		
GERMIM MBUSHJE														−0.052	−0.381	0.110	0.227	−0.096	−0.087	−0.307					
KUOTA E PROJEKTIT														100.799	99.549	98.299	98.299	98.299	99.549	100.799					
DISTANCAT	−25	−22	−20	−18	−15	−12	−10	−8	−5	−2	0	2	5	8	10	12	15	18	20	22	25				

Ing.Kristaq Kali	Mbrojtje lumore "Vrisi",Bajkaj,Delvine	Faza Proj-Zbat
	Profilat Tërthorë	SH 1:100

PROGRESIVI: 0+120
PROFILI : 13

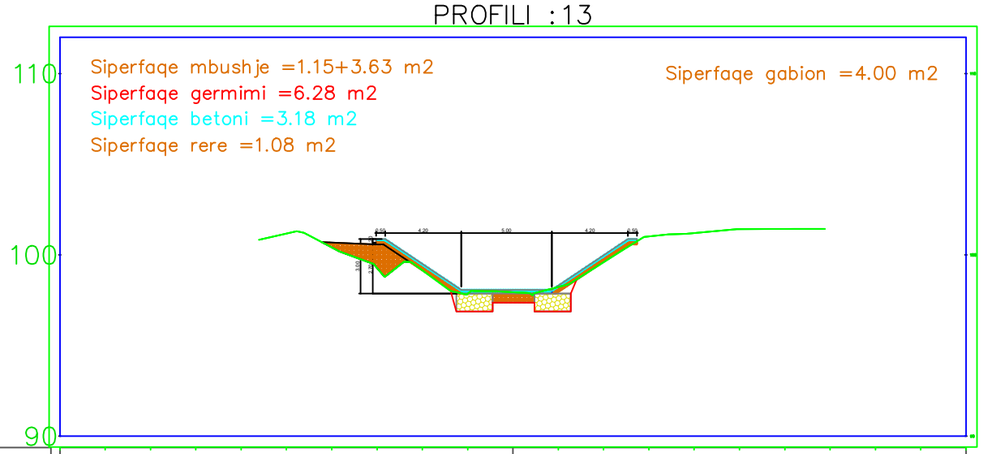

KUOTA E TERENIT													101.176	100.418	99.276	99.144	97.852	97.944	98.230	99.596	101.021	101.205	101.422	101.427		
GERMIM MBUSHJE													1.315	0.197	0.239	0.147	−0.140	−0.256	−0.430							
KUOTA E PROJEKTIT													100.591	99.341	98.091	98.091	98.091	99.341	100.591							
DISTANCAT	−25	−22	−20	−18	−15	−12	−10	−8	−5	−2	0	2	5	8	10	12	15	18	20	22	25					

PROGRESIVI: 0+130
PROFILI : 14

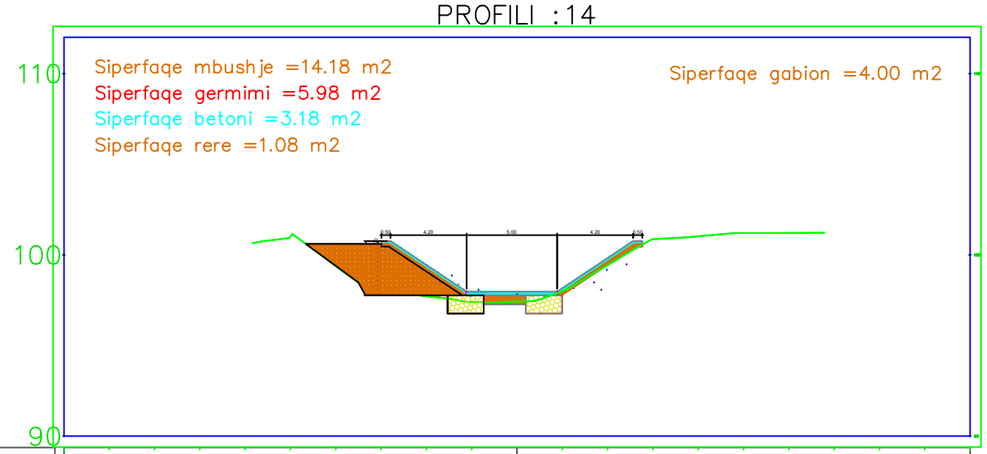

KUOTA E TERENIT													101.011	99.386	97.977	97.722	97.399	97.420	97.996	99.432	100.864	101.024	101.211	101.219		
GERMIM MBUSHJE													2.405	1.410	0.484	0.463	−0.113	−0.300	−0.481							
KUOTA E PROJEKTIT													100.383	99.133	97.883	97.883	97.883	99.133	100.383							
DISTANCAT	−25	−22	−20	−18	−15	−12	−10	−8	−5	−2	0	2	5	8	10	12	15	18	20	22	25					

Ing.Kristaq Kali	Mbrojtje lumore "Vrisi",Bajkaj,Delvine	Faza Proj-Zbat
	Profilat Tërthorë	SH 1:100

PROGRESIVI: 0+140
PROFILI : 15

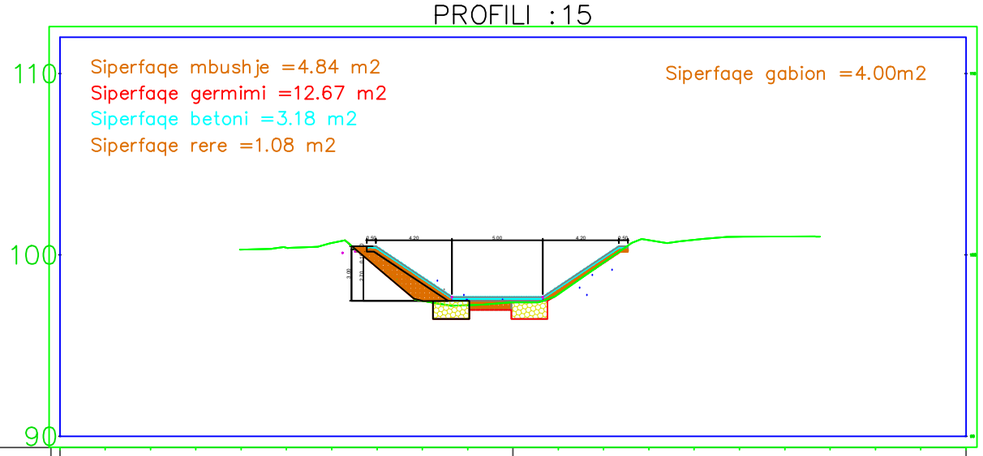

KUOTA E TERENIT													100.294	100.393	100.656	99.524	97.471	97.234	97.388	97.838	99.577	100.819	100.829	101.002	101.012	
GERMIM MBUSHJE													0.650	1.453	0.440	0.287	-0.164	-0.652	-0.645							
KUOTA E PROJEKTIT													100.174	98.925	97.675	97.674	97.674	98.924	100.174							
DISTANCAT	-25	-22	-20	-18	-15	-12	-10	-8	-5	-2	0	2	5	8	10	12	15	18	20	22	25					

PROGRESIVI: 0+150
PROFILI : 16

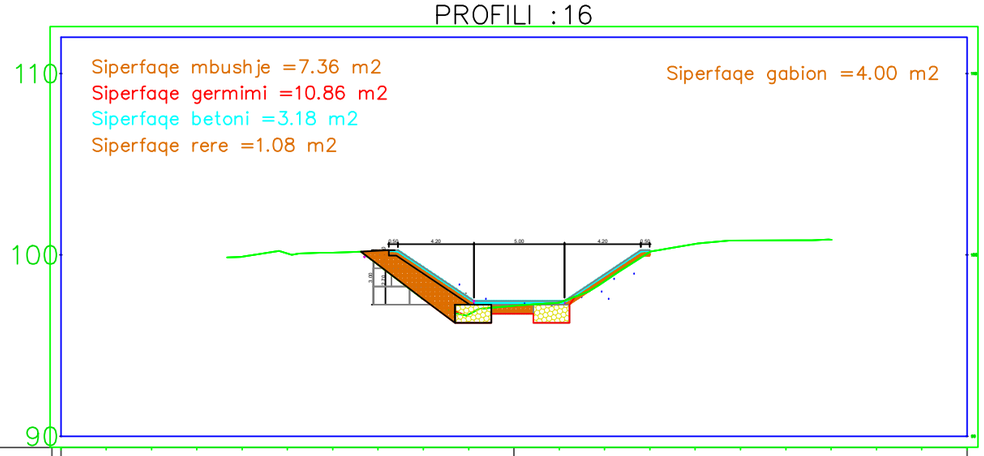

KUOTA E TERENIT													99.893	100.074	100.120	99.459	97.577	96.720	97.199	97.373	98.538	100.164	100.603	100.789	100.804	100.839
GERMIM MBUSHJE													0.507	1.139	0.747	0.268	0.093	0.179	-0.198							
KUOTA E PROJEKTIT													99.966	98.716	97.466	97.466	97.466	98.716	99.966							
DISTANCAT	-25	-22	-20	-18	-15	-12	-10	-8	-5	-2	0	2	5	8	10	12	15	18	20	22	25					

Ing.Kristaq Kali	Mbrojtje lumore "Vrisi",Bajkaj,Delvine	Faza Proj-Zbat
	Profilat Tërthorë	SH 1:100

PROGRESIVI: 0+160
PROFILI : 17

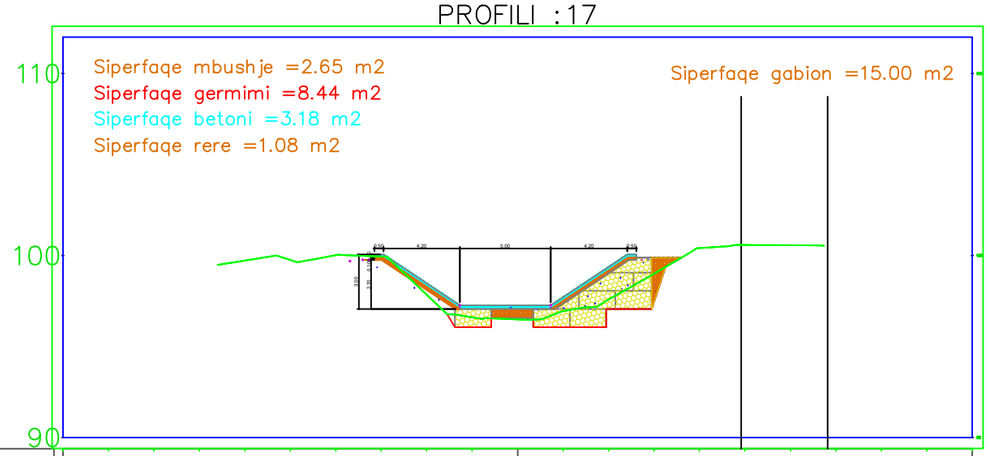

KUOTA E TERENIT													99.726	99.754	100.016	99.942	97.838	96.604	96.491	96.945	97.579	99.005	100.406	100.579	100.561	
GERMIM MBUSHJE																			−0.184	0.670	0.654	0.767	0.313	0.929	0.753	
KUOTA E PROJEKTIT																			99.758	98.508	97.258	97.258	97.258	98.508	99.758	
DISTANCAT	−25	−22	−20	−18	−15	−12	−10	−8	−5	−2	0	2	5	8	10	12	15	18	20	22	25					

PROGRESIVI: 0+170
PROFILI : 18

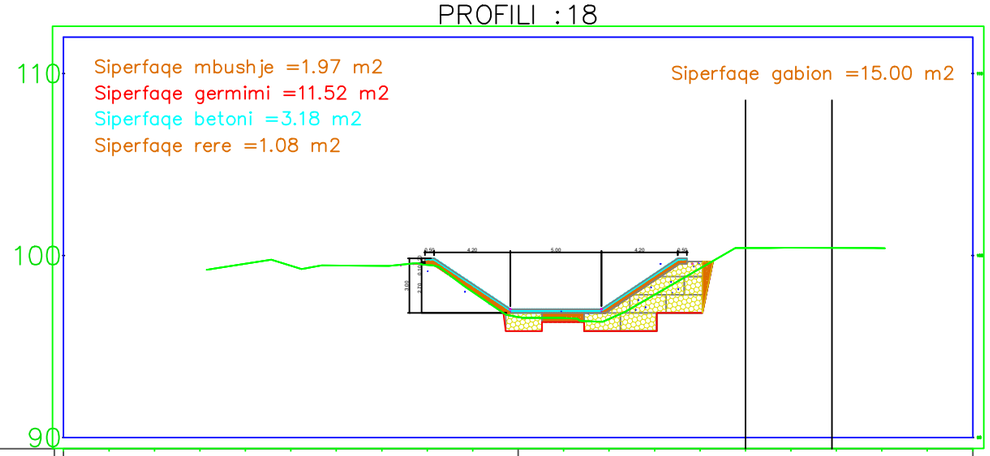

KUOTA E TERENIT													99.551	99.435	99.456	99.439	99.483	98.004	96.621	96.564	96.513	97.838	99.284	100.413	100.429	100.417	100.405
GERMIM MBUSHJE																	0.111	−1.183	−0.954	0.429	0.486	1.787	1.712			
KUOTA E PROJEKTIT																	99.550	98.300	97.050	97.050	97.050	98.300	99.550			
DISTANCAT	−25	−22	−20	−18	−15	−12	−10	−8	−5	−2	0	2	5	8	10	12	15	18	20	22	25					

Ing.Kristaq Kali	Mbrojtje lumore "Vrisi",Bajkaj,Delvine	Faza Proj-Zbat
	Profilat Tërthorë	SH 1:100

PROGRESIVI: 0+180
PROFILI : 19

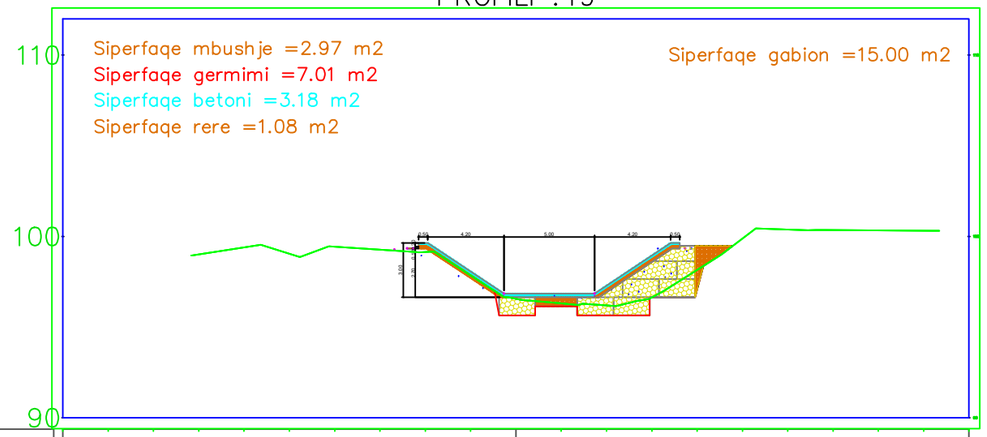

KUOTA E TERENIT									99.007	99.395	99.045	99.438	99.268	99.140	97.852	96.558	96.313	96.189	96.642	98.158	99.883	100.381	100.347	100.332	100.318
GERMIM MBUSHJE								0.074	−1.048	−1.010	0.284	0.529	1.903	2.700											
KUOTA E PROJEKTIT								99.342	98.092	96.842	96.842	96.842	98.092	99.342											
DISTANCAT	−25	−22	−20	−18	−15	−12	−10	−8	−5	−2	0	2	5	8	10	12	15	18	20	22	25				

PROGRESIVI: 0+190
PROFILI : 20

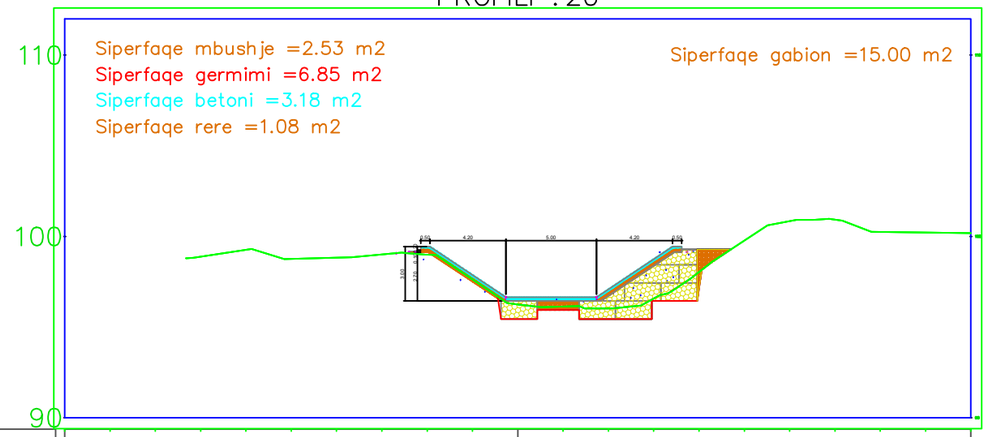

KUOTA E TERENIT									98.880	99.268	98.758	98.831	99.004	98.988	97.631	96.250	96.132	96.027	96.580	98.034	99.767	100.841	100.924	100.250	100.217	100.185
GERMIM MBUSHJE												0.129	−1.104	−0.997	0.383	0.502	1.857	2.553								
KUOTA E PROJEKTIT												99.134	97.884	96.634	96.634	96.634	97.884	99.134								
DISTANCAT	−25	−22	−20	−18	−15	−12	−10	−8	−5	−2	0	2	5	8	10	12	15	18	20	22	25					

Ing.Kristaq Kali	Mbrojtje lumore "Vrisi",Bajkaj,Delvine	Faza Proj-Zbat
	Profilat Tërthorë	SH 1:100

PROGRESIVI: 0+200
PROFILI : 21

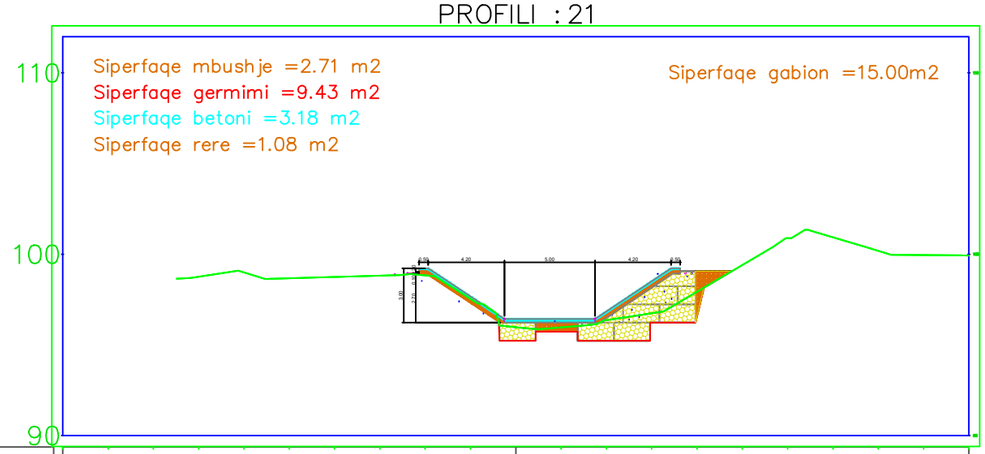

KUOTA E TERENIT								98.752	98.994	98.668	98.741	98.814	98.836	97.533	95.978	95.969	96.359	96.740	97.929	99.403	100.882	100.938	100.190	99.955	99.931
GERMIM MBUSHJE								0.111	-1.161	-1.108	0.447	0.457	1.316	2.185											
KUOTA E PROJEKTIT								98.925	97.676	96.426	96.425	96.425	97.675	98.925											
DISTANCAT	-25	-22	-20	-18	-15	-12	-10	-8	-5	-2	0	2	5	8	10	12	15	18	20	22	25				

PROGRESIVI: 0+210
PROFILI : 22

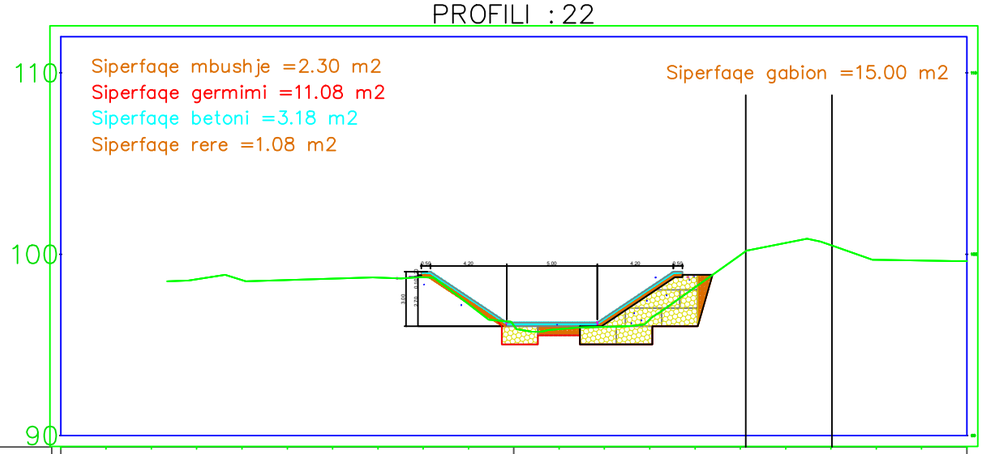

KUOTA E TERENIT								98.625	98.577	98.578	98.651	98.706	98.729	97.244	96.078	95.871	95.998	96.410	98.174	99.956	100.621	100.498	99.689	99.655	99.623
GERMIM MBUSHJE								0.011	-1.262	-1.027	0.139	0.347	1.469	2.307											
KUOTA E PROJEKTIT								98.717	97.467	96.217	96.217	96.217	97.467	98.717											
DISTANCAT	-25	-22	-20	-18	-15	-12	-10	-8	-5	-2	0	2	5	8	10	12	15	18	20	22	25				

Ing.Kristaq Kali	Mbrojtje lumore "Vrisi",Bajkaj,Delvine	Faza Proj-Zbat
	Profilat Tërthorë	SH 1:100

PROGRESIVI: 0+220
PROFILI : 23

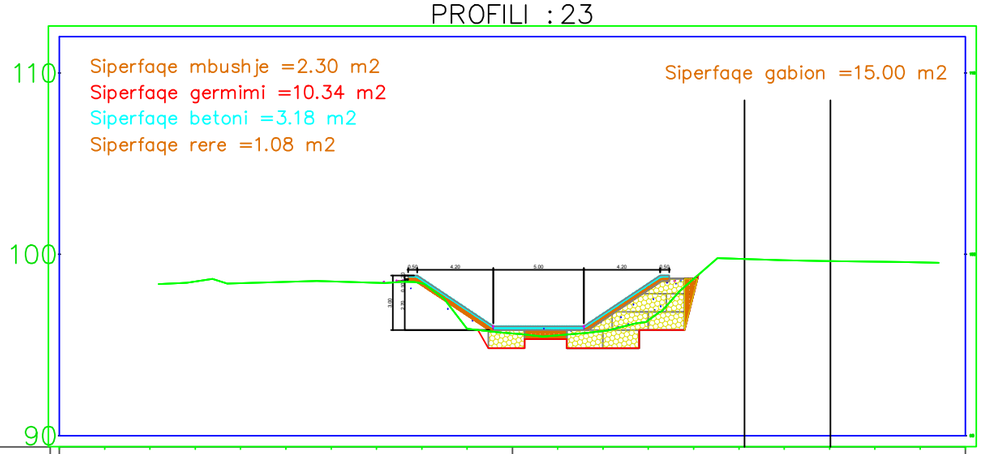

KUOTA E TERENIT								98.497	98.414	98.488	98.510	98.425	98.401	95.889	95.640	95.534	95.772	96.363	98.649	99.757	99.674	99.630	99.601	99.556
GERMIM MBUSHJE								0.085	-1.142	0.120	0.369	0.475	1.487	2.146										
KUOTA E PROJEKTIT								98.509	97.259	96.009	96.009	96.009	97.259	98.509										
DISTANCAT	-25	-22	-20	-18	-15	-12	-10	-8	-5	-2	0	2	5	8	10	12	15	18	20	22	25			

PROGRESIVI: 0+230
PROFILI : 24

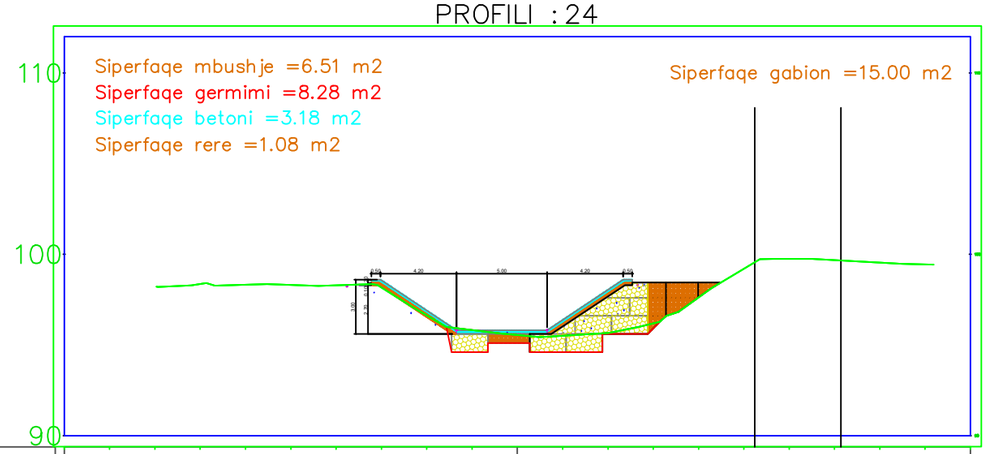

KUOTA E TERENIT								98.370	98.324	98.314	98.293	98.164	96.637	95.823	95.546	95.504	95.664	96.189	97.621	99.206	99.742	99.679	99.548	99.445
GERMIM MBUSHJE								0.137	0.414	-0.022	0.255	0.297	1.387	2.111										
KUOTA E PROJEKTIT								98.301	97.051	95.801	95.801	95.801	97.051	98.301										
DISTANCAT	-25	-22	-20	-18	-15	-12	-10	-8	-5	-2	0	2	5	8	10	12	15	18	20	22	25			

Ing.Kristaq Kali	Mbrojtje lumore "Vrisi",Bajkaj,Delvine	Faza Proj-Zbat
	Profilat Tërthorë	SH 1:100

PROGRESIVI: 0+240
PROFILI : 25

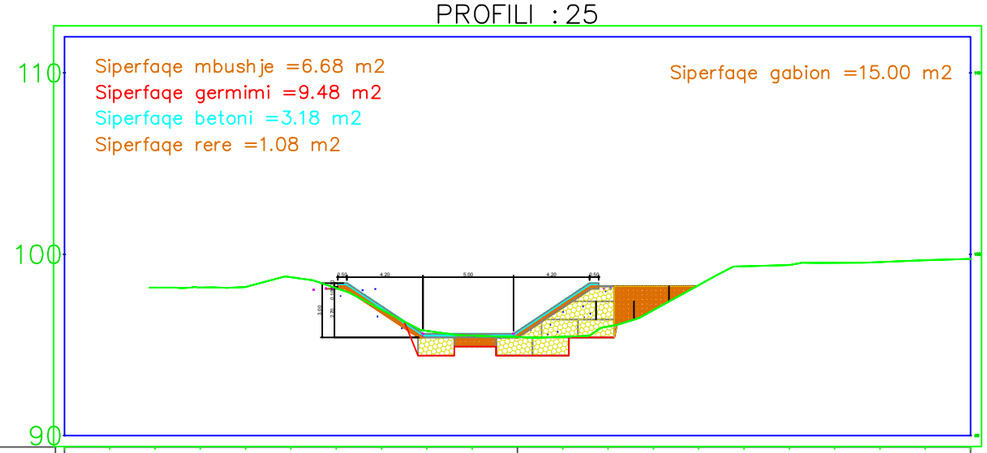

KUOTA E TERENIT									98.157	98.161	98.190	98.734	98.133	96.952	95.776	95.519	95.435	95.453	96.014	96.926	98.301	99.336	99.404	99.532	99.573	99.667	99.731
GERMIM MBUSHJE													1.141	1.066	0.074	0.158	0.140	0.829	1.167								
KUOTA E PROJEKTIT													98.093	96.843	95.593	95.593	95.593	96.843	98.093								
DISTANCAT	-25	-22	-20	-18	-15	-12	-10	-8	-5	-2	0	2	5	8	10	12	15	18	20	22	25						

PROGRESIVI: 0+250
PROFILI : 26

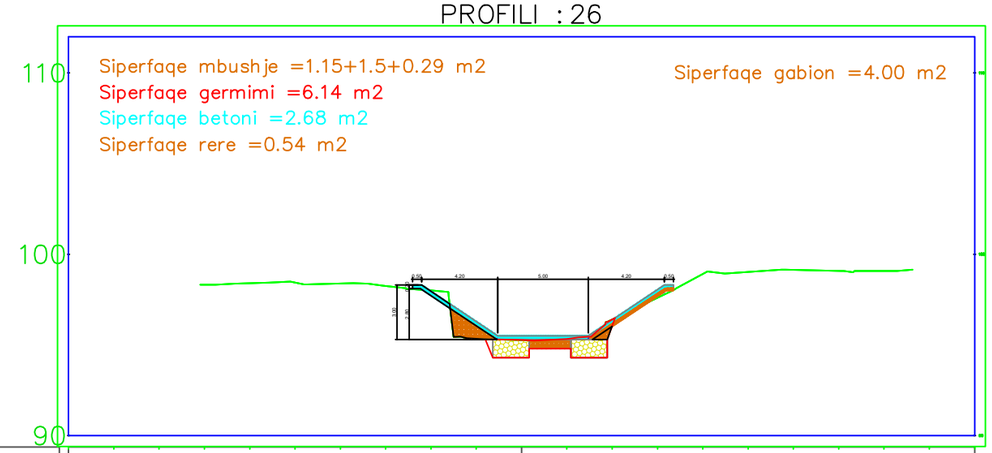

KUOTA E TERENIT									98.316	98.404	98.442	98.385	98.252	98.001	95.346	95.265	95.327	96.408	97.606	98.914	99.027	99.142	99.084	99.079
GERMIM MBUSHJE												-0.367	-1.366	0.039	0.120	0.058	0.227	0.278						
KUOTA E PROJEKTIT												97.885	96.635	95.385	95.385	95.385	96.635	97.885						
DISTANCAT	-25	-22	-20	-18	-15	-12	-10	-8	-5	-2	0	2	5	8	10	12	15	18	20	22	25			

Ing.Kristaq Kali	Mbrojtje lumore "Vrisi",Bajkaj,Delvine	Faza Proj-Zbat
	Profilat Tërthorë	SH 1:100

PROFIL TERTOR TIP SH.1:75
Nga Pik.05~ Pik.17

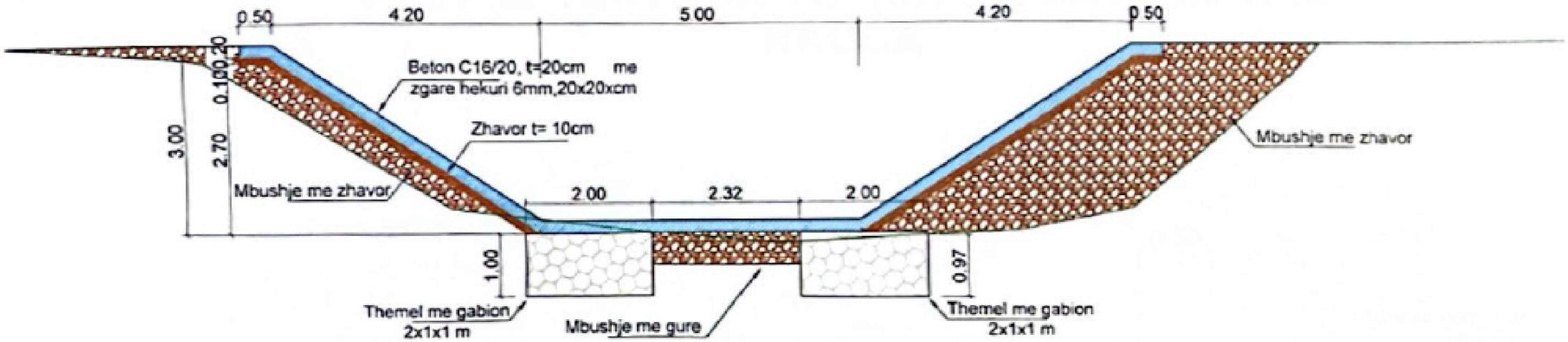

PROFIL TERTOR TIP SH.1:75
Nga Pik.17~Pik.25

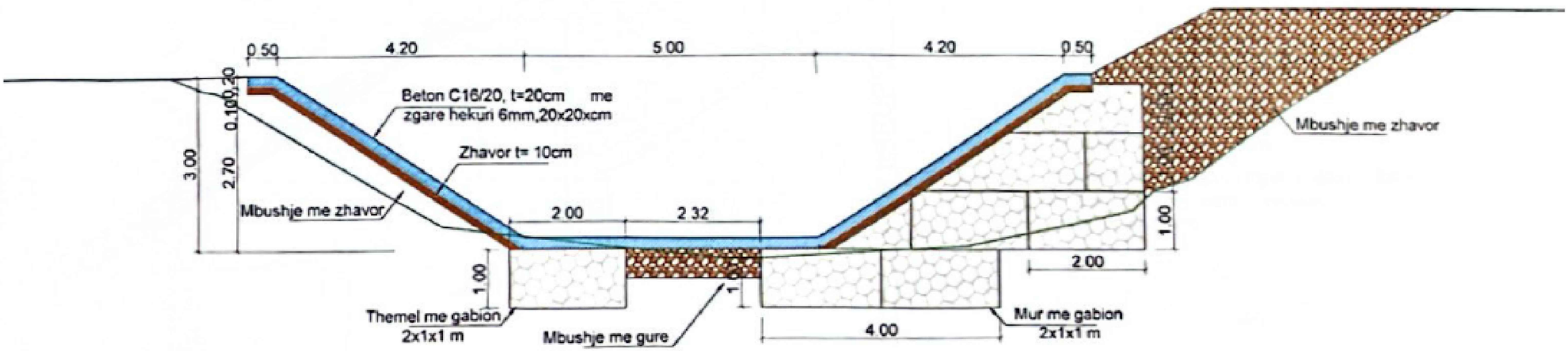

rrjeta e gabionit

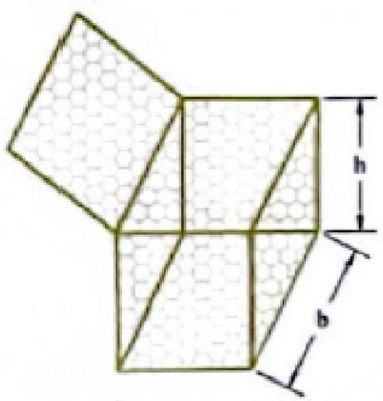

detaje te rrjetes

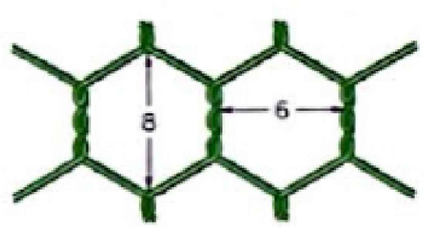

	REPUBLIKA E SHQIPERISË QARKU VLORË BASHKIA DELVINE	DREJTORIA E URBANISTIKES
OBJEKTI: MBROJTJE LUMORE "VRISI",BAJKAJ,DELVINE		
PROJEKTOI:	iNG.KRISTAQ KALI LIÇ.: H/T.0103/5	

PROFILI TERTHOR TIP (SHTRESAT) SH 1:50

RRUGA

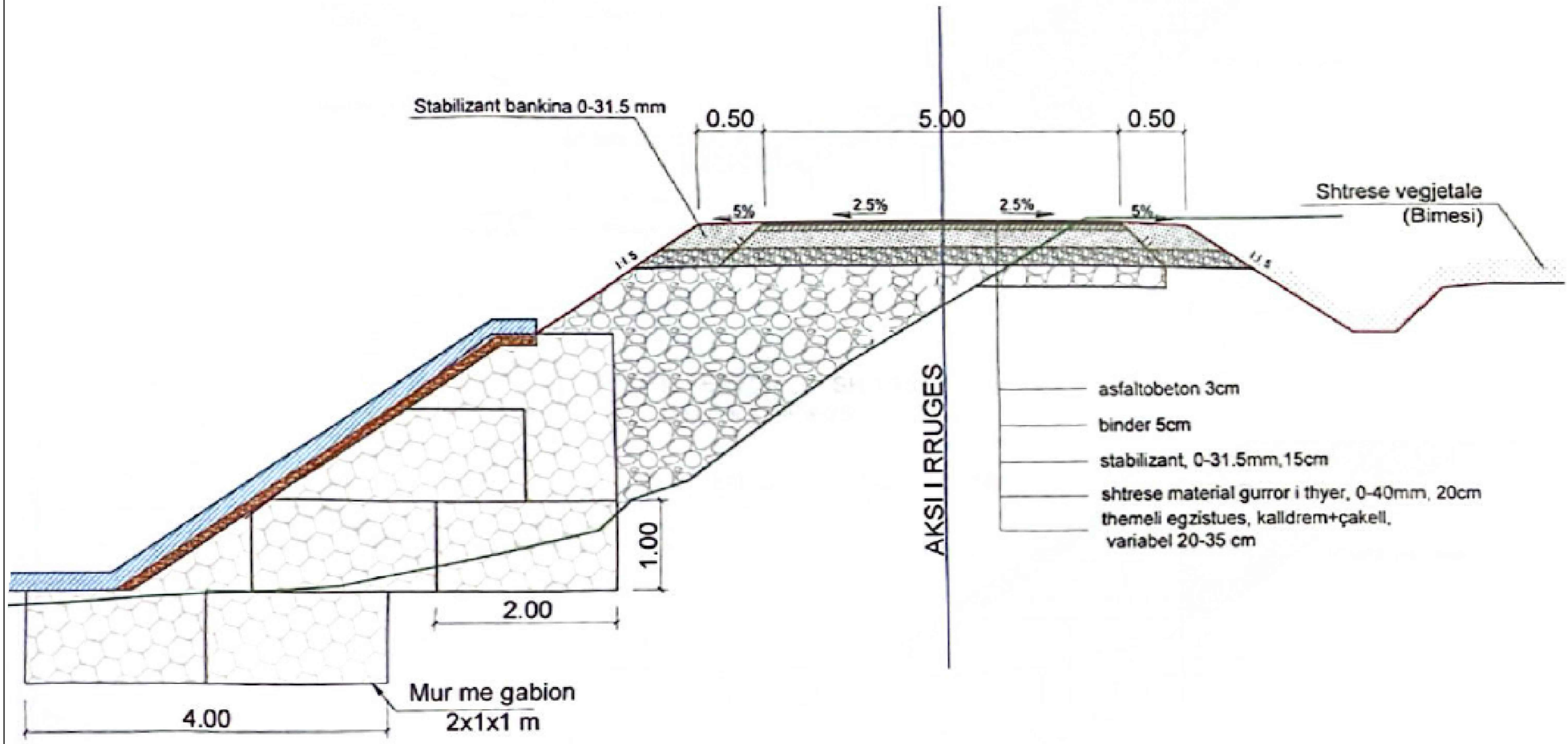

	REPUBLIKA E SHQIPERISË QARKU VLORË BASHKIA DELVINE	DREJTORIA E URBANISTIKES
OBJEKTI: MBROJTJE LUMORE "VRISI",BAJKAJ,DELVINE		
PROJEKTOI:	iNG.KRISTAQ KALI LIÇ.: H/T.0103/5	

PROFIL TERTOR TIP SH.1:75
Nga Pik.05~ Pik.17

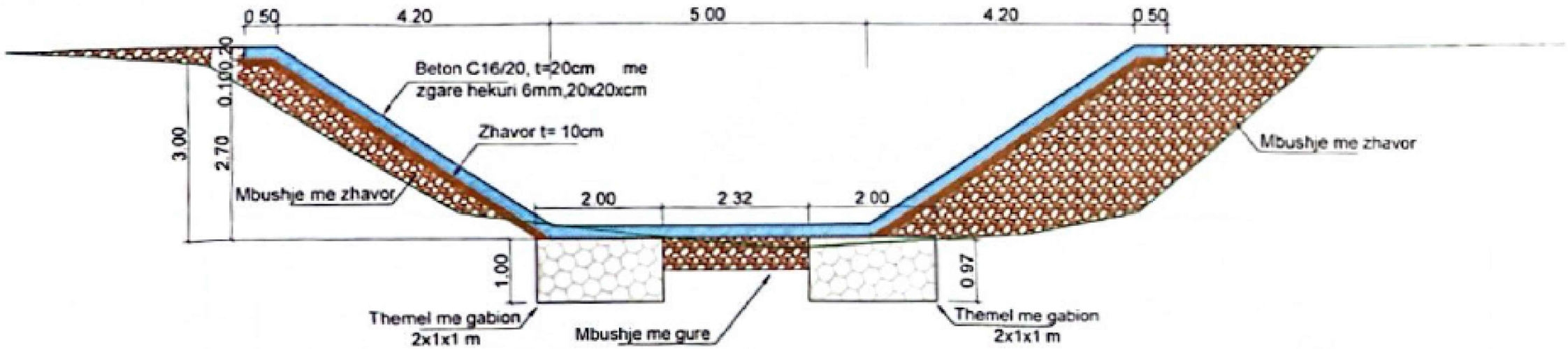

PROFIL TERTOR TIP SH.1:75
Nga Pik.17~Pik.25

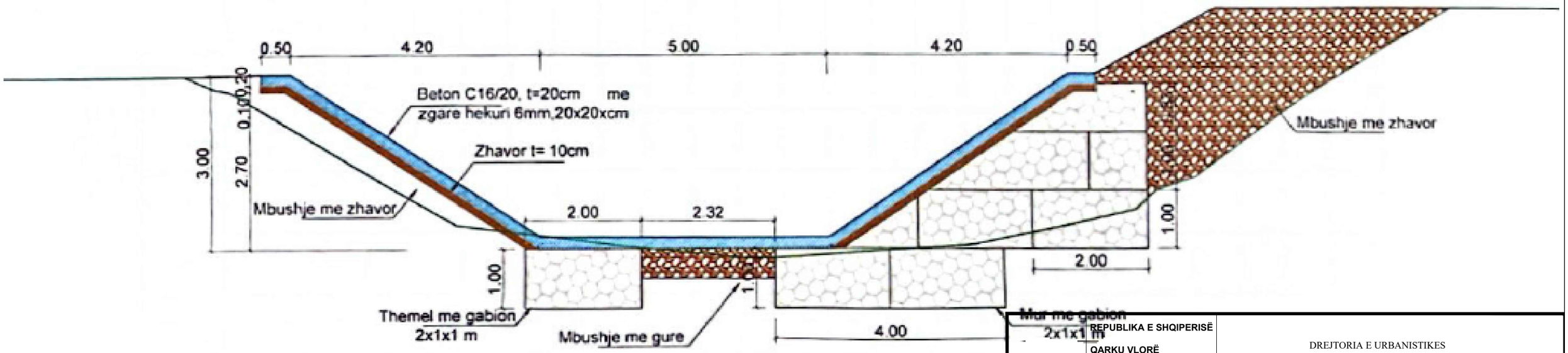

	REPUBLIKA E SHQIPERISË QARKU VLORË BASHKIA DELVINE	DREJTORIA E URBANISTIKES
OBJEKTI: MBROJTJE LUMORE "VRISI",BAJKAJ,DELVINE		
PROJEKTOI:	iNG.KRISTAQ KALI LIÇ.: H/T.0103/5	

PROFILI GJATESOR - SEGMENTI PRITES E PAS PRITES

Seksion Tip i mbrojtjes me gure; Pk.1-13

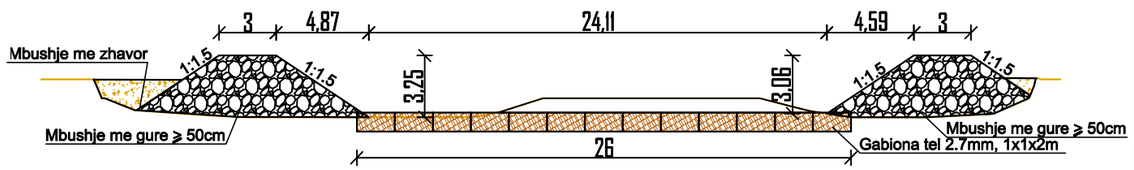

Seksion tip me gure e beton; Pk.13-18

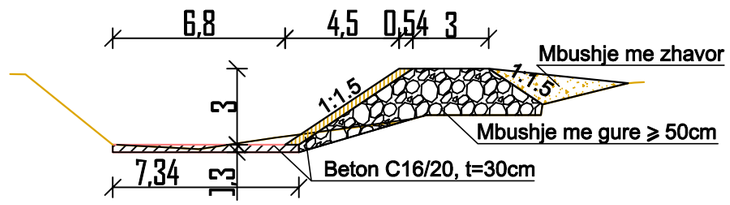

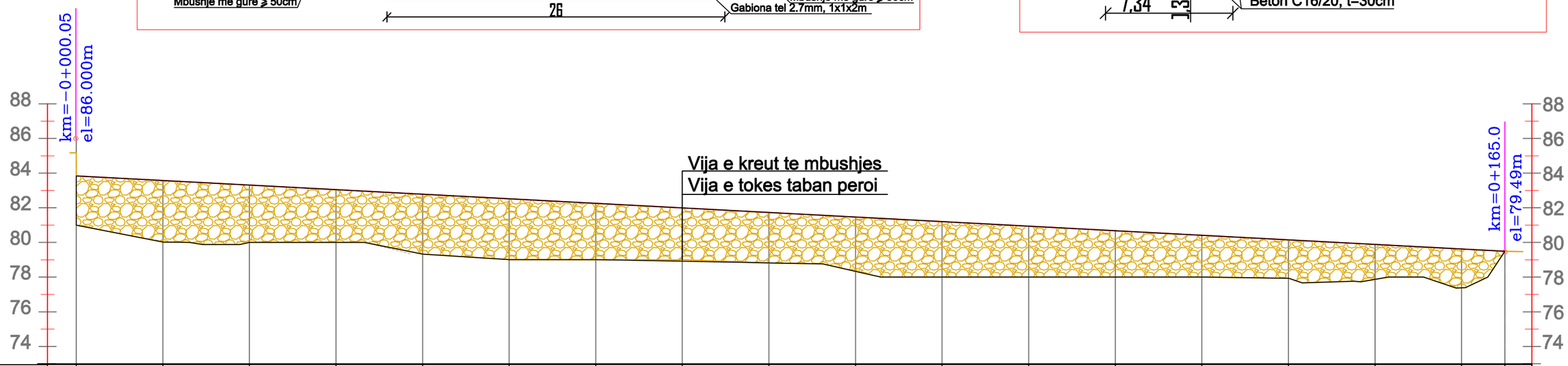

Nr. Piketes	Pk-1	Pk-2	Pk-3	Pk-4	Pk-5	Pk-6	Pk-7	Pk-8	Pk-9	Pk-10	Pk-11	Pk-12	Pk-13	Pk-14	Pk-15	Pk-16	Pk-17	Pk-18
Kuota Tabanit (ekzistues)	85.00	79.96	79.76	79.81	79.21	78.85	78.88	78.87	78.73	78.34	78.14	77.94	77.68	78.00	78.00	77.86	77.39	79.49
Kuota Projektit	83.84	83.58	83.31	83.05	82.79	82.52	82.26	81.99	81.73	81.47	81.20	80.94	80.68	80.41	80.15	79.89	79.62	79.49
Lartesi mbushje	2.84	3.56	3.31	3.05	3.46	3.51	3.50	3.00	2.91	3.12	3.20	2.94	2.68	2.41	2.21	2.02	2.18	0.00
Pjesore		10	10	10	10	10	10	10	10	10	10	10	10	10	10	10	5	
Progresive	0+000	0+010	0+020	0+030	0+040	0+050	0+060	0+070	0+080	0+090	0+100	0+110	0+120	0+130	0+140	0+150	0+160	0+165
Pjeresia kurore		L=165ml i=2.264%																

PROFILAT TERRTHORE - SEGMENTI PAS PRITES

Km.0+000 (CS-1)

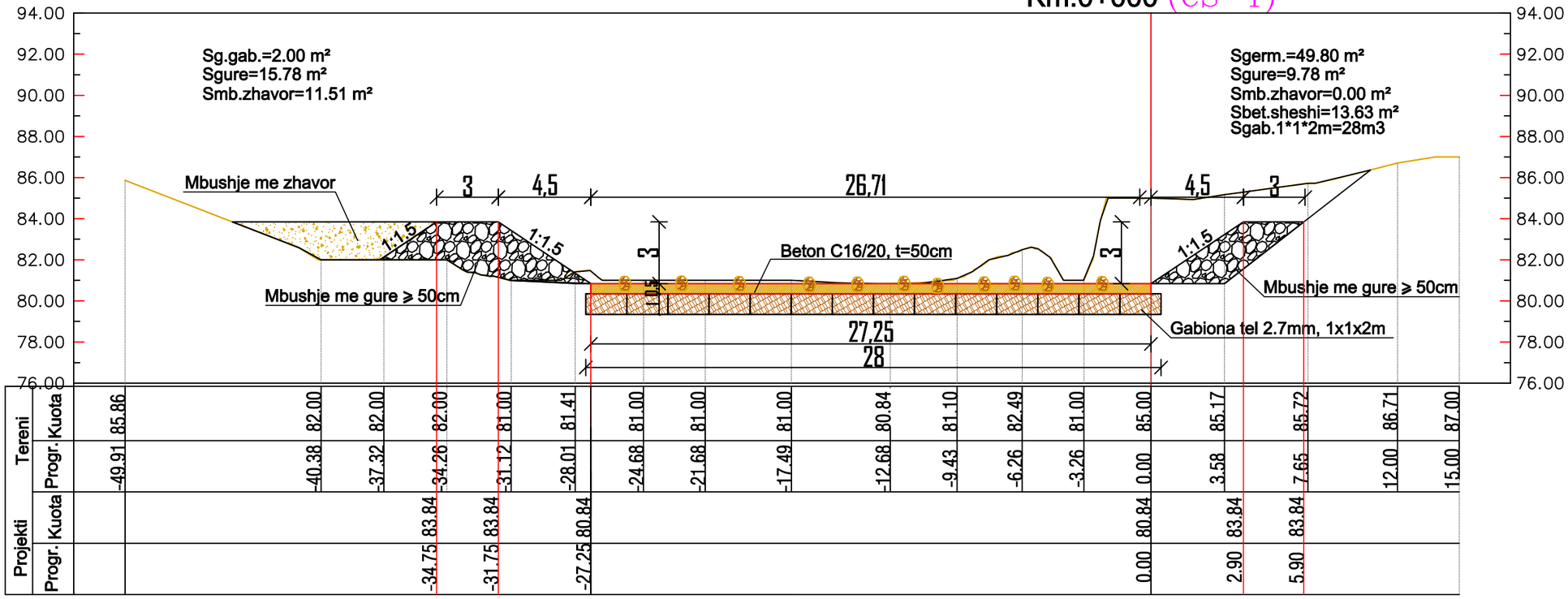

Tereni	Kuota	85.86	82.00	82.00	82.00	81.00	81.41	81.00	81.00	81.00	80.84	81.10	82.49	81.00	85.00	85.17	85.72	86.71	87.00
	Progr.	-49.91	-40.38	-37.32	-34.26	-31.12	-28.01	-24.68	-21.68	-17.49	-12.68	-9.43	-6.26	-3.26	0.00	3.58	7.65	12.00	15.00
Projekti	Kuota				83.84	83.84	80.84								80.84	83.84	83.84		
	Progr.				-34.75	-31.75	-27.25								0.00	2.90	5.90		

Km.0+010 (CS-2)

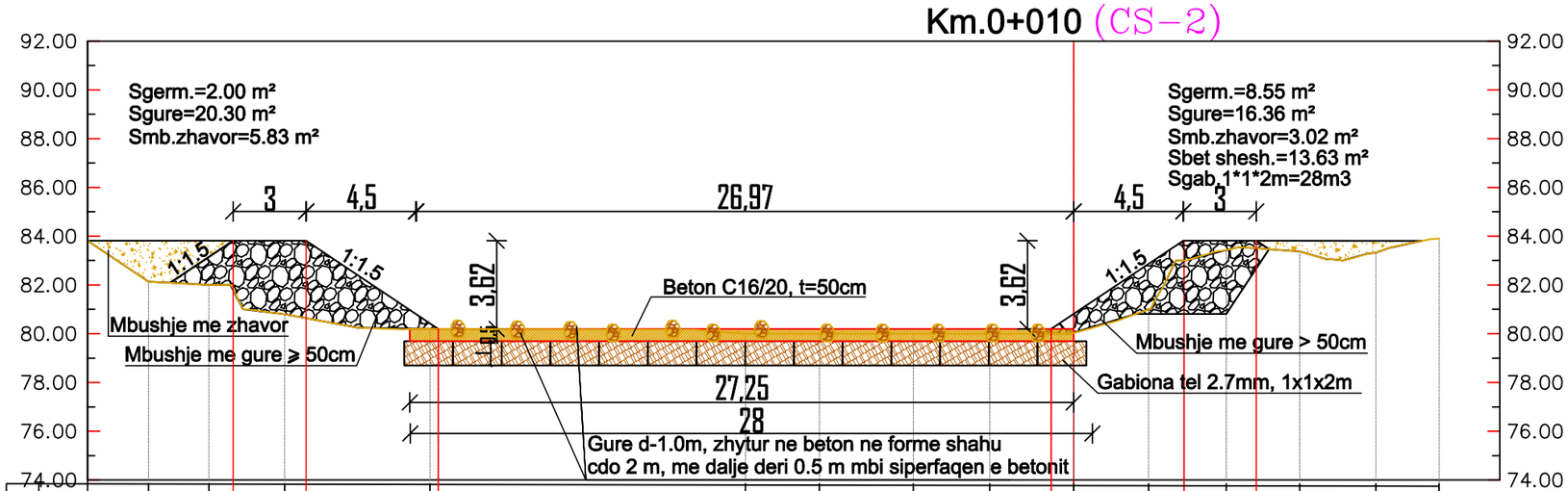

Tereni	Kuota	82.19	82.00	80.80	80.20	80.00	80.00	80.00	80.00	79.86	80.99	83.42	83.37	83.32	83.91
	Progr.	-37.98	-35.50	-32.39	-26.42	-13.47	-10.44	-6.58	-3.44	0.00	3.08	6.27	9.29	12.41	15.00
Projekti	Kuota		83.58	83.58	80.19					80.19	83.58	83.58			
	Progr.		-33.47	-31.47	-26.08					-0.92	4.50	7.50			

Profili gjatesor i prites

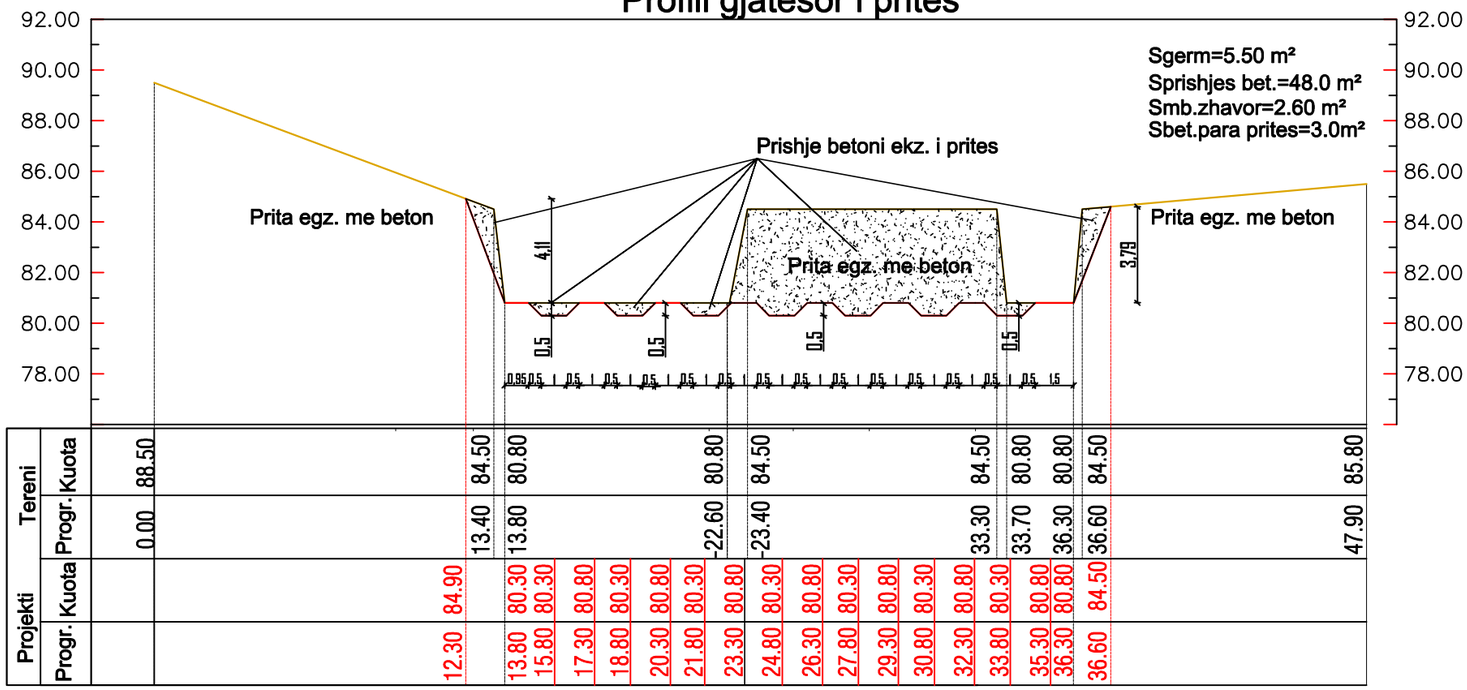

Profili terrthor i prites

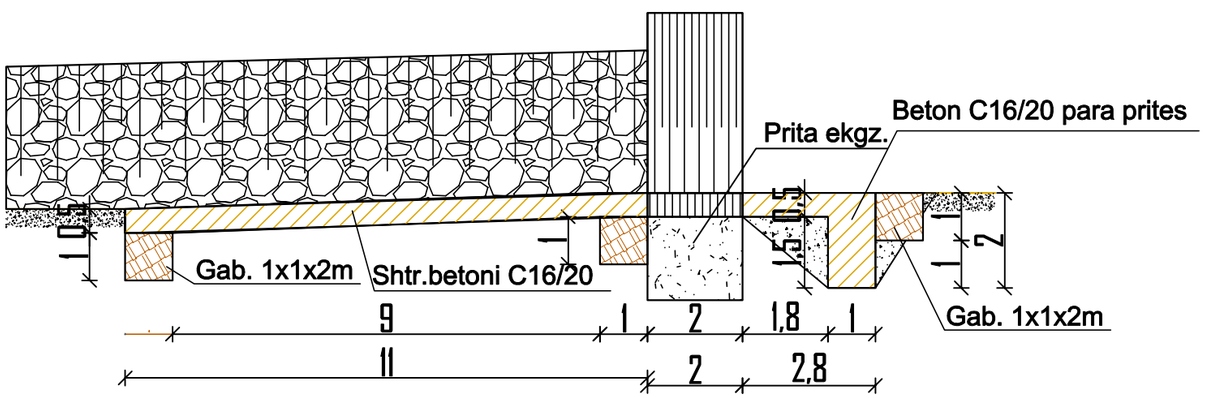

Kristaq Kali

Digitally signed by Kristaq Kali
Date: 2026.06.16 13:09:10 +02'00'

Tabela e volumeve te germinit

Pk	Sg.djath	Sm	L	Sasia
	m2	m2	ml	m3
1	49.60			
2	8.55	54.08	10	541
3	0.00	8.55	10	86
4	0.00	0.00	10	0
5	0.00	0.00	10	0
6	0.00	0.00	10	0
7	4.47	2.24	10	22
8	5.22	7.08	10	71
9	4.09	7.27	10	73
10	8.79	8.49	10	85
11	10.58	14.07	11	155
12	3.79	12.46	12	149
13	11.55	9.57	13	124
14	1.35	12.24	14	171
15	6.60	4.85	15	70
16	4.58	8.88	16	142
17	5.75	7.14	17	121
18	2.75	6.53	18	118
Shuma (m3)				1927

Tabela e volumeve te mbushjes me gure

Pk	Sg.maj	Sg.djath	Sg	Sm	L	Sasia
	m2	m2	m2	m2	ml	m3
1	15.78	9.78	25.56			
2	20.30	16.36	36.66	31.11	10	311
3	17.10	19.48	36.58	36.62	10	366
4	14.58	18.31	32.89	34.74	10	347
5	22.38	16.29	38.67	35.78	10	358
6	23.40	20.52	43.92	41.30	10	413
7	27.28	19.58	46.84	45.38	10	454
8	25.00	17.00	42.00	44.42	10	444
9	22.36	18.88	41.24	41.62	10	416
10	27.54	19.97	47.51	44.38	10	444
11	22.40	22.87	45.27	46.39	11	510
12	20.65	21.93	42.58	43.93	12	527
13	7.06	13.47	20.53	31.56	13	410
14		11.81	11.81	16.17	14	226
15		13.80	13.80	12.81	15	192
16		13.24	13.24	13.52	16	216
17		10.89	10.89	12.07	17	205
18		8.26	8.26	9.56	18	172
Shuma (m3)						6013

Tabela e volumeve te mbushjes me zhavor

Pk	Sg.maj	Sg.djath	Sg	Sm	L	Sasia
	m2	m2	m2	m2	ml	m3
1	11.51	0.00	11.51			
2	5.83	3.02	8.85	10.18	10	102
3	3.30	0.00	3.30	6.08	10	61
4	0.00	0.00	0.00	1.65	10	17
5	0.00	0.00	0.00	0.00	10	0
6	0.00	0.00	0.00	0.00	10	0
7	2.10	0.00	2.10	1.05	10	11
8	6.41	0.00	6.41	4.26	10	43
9	7.07	0.00	7.07	6.74	10	67
10	3.75	0.00	3.75	5.41	10	54
11	4.87	0.80	5.67	4.71	11	52
12	3.31	3.42	6.73	6.20	12	74
13	0.00	0.00	0.00	3.37	13	44
14	0.00	0.00	0.00	0.00	14	0
15		2.41	2.41	1.21	15	18
16		3.28	3.28	2.85	16	46
17		0.00	0.00	1.64	17	28
18		0.00	0.00	0.00	18	0
Shuma (m3)						615

Tabela e punimeve prita, segmenti pas prites & riparimet ve veshjet ekzistuese

Nr	Emertimi i punimeve	Njesia	Mb.gure	Gabionat	Prita	Riparim	Shuma
1	Germim per mbrojtjen	m3	1927	676	143		2746
2	Germim per ruge hyrese	m3	1600				1600
3	Germim ne shkemb me cekic	m3				176	176
4	Germim me eskavator shkarkim ne mjet	m3				176	176
5	Prishje betoni prita ekzistuese	m3	40		96		136
6	Mbushje e ngjeshje me gure	m3	6013				6013
7	Mbushje me zhavor pas skolerave ne	m3	615		72.8		688
8	Gabiona 1x1x2 tel zingato 2.7 mm	m3		352			352
9	Beton C16/20 per mbrojtjen	m3	442		78	194.4	714
10	Transport auto 1 km	m3				176	176